This is a digital copy of a book that was preserved for generations on library shelves before it was carefully scanned by Google as part of a project to make the world's books discoverable online.

It has survived long enough for the copyright to expire and the book to enter the public domain. A public domain book is one that was never subject to copyright or whose legal copyright term has expired. Whether a book is in the public domain may vary country to country. Public domain books are our gateways to the past, representing a wealth of history, culture and knowledge that's often difficult to discover.

Marks, notations and other marginalia present in the original volume will appear in this file - a reminder of this book's long journey from the publisher to a library and finally to you.

Usage guidelines

Google is proud to partner with libraries to digitize public domain materials and make them widely accessible. Public domain books belong to the public and we are merely their custodians. Nevertheless, this work is expensive, so in order to keep providing this resource, we have taken steps to prevent abuse by commercial parties, including placing technical restrictions on automated querying.

We also ask that you:

+ *Make non-commercial use of the files* We designed Google Book Search for use by individuals, and we request that you use these files for personal, non-commercial purposes.

+ *Refrain from automated querying* Do not send automated queries of any sort to Google's system: If you are conducting research on machine translation, optical character recognition or other areas where access to a large amount of text is helpful, please contact us. We encourage the use of public domain materials for these purposes and may be able to help.

+ *Maintain attribution* The Google "watermark" you see on each file is essential for informing people about this project and helping them find additional materials through Google Book Search. Please do not remove it.

+ *Keep it legal* Whatever your use, remember that you are responsible for ensuring that what you are doing is legal. Do not assume that just because we believe a book is in the public domain for users in the United States, that the work is also in the public domain for users in other countries. Whether a book is still in copyright varies from country to country, and we can't offer guidance on whether any specific use of any specific book is allowed. Please do not assume that a book's appearance in Google Book Search means it can be used in any manner anywhere in the world. Copyright infringement liability can be quite severe.

About Google Book Search

Google's mission is to organize the world's information and to make it universally accessible and useful. Google Book Search helps readers discover the world's books while helping authors and publishers reach new audiences. You can search through the full text of this book on the web at `http://books.google.com/`

(52)

ARTES
VERITAS
SCIENTIA
LIBRARY OF THE
UNIVERSITY OF MICHIGAN
DEPARTMENT
OF
ENGINEERING

gen.
TA
1
.I615

Yours faithfully
A. A. Denny

ELECTED PRESIDENT, 1902.

TRANSACTIONS

OF THE

Institution of Engineers and Shipbuilders

IN SCOTLAND

(INCORPORATED).

VOLUME XLVII.

FORTY-SEVENTH SESSION, 1903-1904.

EDITED BY THE SECRETARY.

GLASGOW:
PUBLISHED BY THE INSTITUTION AT
207 BATH STREET.

1904.

PRINTED FOR THE INSTITUTION BY
WILLIAM ASHER, PRINTER AND PUBLISHER,
164 HOWARD STREET, GLASGOW.

OFFICE-BEARERS.

FORTY-SEVENTH SESSION, 1903-1904.

President.

ARCHIBALD DENNY,

Vice-Presidents.

WILLIAM M. ALSTON.
PROF. J. H. BILES, LL.D.
E. HALL-BROWN.
JAMES GILCHRIST.
A. W. SAMPSON.
JAMES WEIR.

Councillors.

Members.

PROF. ARCHIBALD BARR, D.Sc.
A. S. BIGGART.
WILLIAM BROWN.
W. A. CHAMEN.
ALEXANDER CLEGHORN.
ALEXANDER GRACIE.
C. P. HOGG.
GEORGE McFARLANE.
HENRY MECHAN.
WILLIAM MELVILLE.
JAMES MOLLISON.
F. J. ROWAN.
JOHN STEVEN.
JOHN WARD.
A. D. WEDGWOOD.

Associates.

LAURENCE MACBRAYNE.
JAMES NAPIER, M.A.
J. D. YOUNG.

Finance Committee.

THOMAS KENNEDY, *Convener.*
PROF. J. H. BILES, LL.D.
ALEXANDER GRACIE.
JAMES MOLLISON.
HENRY MECHAN.
F. J. ROWAN.
JAMES WEIR.

Library Committee.

WILLIAM BROWN, *Convener.*
WILLIAM M. ALSTON.
PROF. A. BARR, D.Sc.
W. A. CHAMEN.
E. HALL-BROWN.
WILLIAM MELVILLE.
JOHN STEVEN.
JOHN WARD.

House Committee.

From Institution.

ARCHIBALD DENNY.
JAMES GILCHRIST.
C. P. HOGG.
GEORGE McFARLANE.
A. W. SAMPSON.
EDWARD H. PARKER, *Secretary.*

From Royal Philosophical Society.

PROF. A. BARR, D.Sc.
PROF. PETER BENNETT.
GEORGE NEILSON.
JOHN ROBERTSON.
JOHN MANN, *Treasurer.*

Committee on Papers.

PROF. J. H. BILES, LL.D., *Convener.*
A. S. BIGGART.
WILLIAM M. ALSTON.
W. A. CHAMEN.
ARCHIBALD DENNY.
ALEXANDER GRACIE.
E. HALL-BROWN.
A. D. WEDGWOOD.

Honorary Councillors—Past Presidents.

HAZELTON R. ROBSON.
GEORGE RUSSELL.
JOHN INGLIS, LL.D.
ROBERT CAIRD, LL.D.
SIR WILLIAM ARROL, LL.D., M.P.

Representatives on the Board of Trade Consultative Committee.

JOHN DUNCAN. E. HALL-BROWN. JAMES HAMILTON. GEORGE McFARLANE.

Representatives on Lloyd's Technical Committee.

SINCLAIR COUPER.
RICHARD RAMAGE.
JOHN INGLIS, LL.D.
JAMES ROWAN.

Representative on the Board of Governors of the Glasgow School of Art.

JAMES MOLLISON.

Representative on the Board of Governors of the Glasgow and West of Scotland Technical College. JAMES WEIR.

Honorary Treasurer—THOMAS KENNEDY, Messrs. Glenfield & Kennedy, Ltd., Kilmarnock.

Secretary and Editor of Transactions—EDWARD H. PARKER.
Institution Rooms, 207 Bath Street.

Curator and Sub-Librarian—FRANCIS MARTIN, Institution Rooms, 207 Bath Street.

143317

PRESIDENTS OF THE INSTITUTION
SINCE FOUNDATION IN 1857.

1857-59 WILLIAM JOHN MACQUORN RANKINE, C.E., LL.D., F.R.SS.L. & E., Professor of Civil Engineering and Mechanics, Glasgow University.

1859-61 WALTER MONTGOMERIE NEILSON, Hyde Park Locomotive Works, Glasgow.

1861-63 WILLIAM JOHNSTONE, C.E., Resident Engineer, Glasgow & South-Western Railway, Glasgow.

1863-65 JAMES ROBERT NAPIER, Engineer and Shipbuilder, Glasgow.

1865-67 JAMES GRAY LAWRIE, Engineer and Shipbuilder, Glasgow.

1867-69 JAMES MORRIS GALE, C.E., Engineer, Glasgow Corporation Water Works.

1869-70 WILLIAM JOHN MACQUORN RANKINE, C.E., LL.D., F.R.SS.L. & E., Professor of Civil Engineering and Mechanics, Glasgow University.

1870-72 DAVID ROWAN, Marine Engineer, Glasgow.

1872-74 ROBERT DUNCAN, Shipbuilder, Port-Glasgow.

1874-76 HAZELTON ROBSON ROBSON, Marine Engineer, Glasgow.

1876-78 ROBERT BRUCE BELL, Civil Engineer, Glasgow.

1878-80 ROBERT MANSEL, Shipbuilder, Glasgow.

1880-82 JOHN LENNOX KINCAID JAMIESON, Marine Engineer, Glasgow.

1882-84 JAMES REID, Hyde Park Locomotive Works, Glasgow.

1884-86 JAMES THOMSON, LL.D., F.R.S., Professor of Civil Engineering and Mechanics, Glasgow University.

1886-87 WILLIAM DENNY, Shipbuilder, Dumbarton.

1887-89 ALEXANDER CARNEGIE KIRK, LL.D., Marine Engineer, Glasgow.

1889-91 EBENEZER KEMP, Marine Engineer, Glasgow.

1891-93 ROBERT DUNDAS, C.E., Resident Engineer, Southern Division, Caledonian Railway, Glasgow.

1893-95 JOHN INGLIS, LL.D., Engineer and Shipbuilder, Glasgow.

1895-97 SIR WILLIAM ARROL, LL.D., M.P., Engineer and Bridge Builder, Glasgow.

1897-99 GEORGE RUSSELL, Mechanical Engineer, Motherwell.

1899-01 ROBERT CAIRD, LL.D., F.R.S.E., Shipbuilder, Greenock.

1901-03 WILLIAM FOULIS, Engineer, Glasgow Corporation Gas Works.

Elected

28th April, 1902 ARCHIBALD DENNY, Shipbuilder, Dumbarton.

CONTENTS.

	PAGE
Office-Bearers,	iii
Presidents of the Institution,	iv
Memorandum and Articles of Association,	ix
Address by Chairman,	1

PAPERS READ.

Superheated Steam—by Mr F. J. Rowan,	4
Improvements in Valve-Gears—by Mr John Riekie,	84
Marine Propellers with Non Reversible Engines and Internal Combustion Engines—by Mr Rankin Kennedy,	96
An Inquiry Regarding the Marine Propeller—by Mr J. Millen Adam,	134
Lecture on Radium (Synopsis), by Dr John Macintyre, F.R.S.E.,	163
Experiments with Rapid Cutting Steel Tools—by Mr Charles Day,	170
The Hewitt Mercury Vapour Lamp—by Prof. Magnus Maclean, M.A., D.Sc.,	192
The Uses of the Integraph in Ship Calculations—by Mr John G. Johnstone, B.Sc.,	195
Some Modern Appliances connected with Railway Crossings and Points—by Mr Owen R. Williams, B.Sc.,	224
Motor Cars—by Mr Alexander Govan,	240

"James Watt" Anniversary Dinner,	286
Minutes of Proceedings,	293
Report of the Council,	312
Treasurer's Statement,	318
Report of the Library Committee,	323
New Books Added to Library,	324
Obituary,	333
List of Members,	346
Index,	397

PLATES.

Superheated Steam, ... I., II., III., IV.
Improvements in Valve-Gears, ... V., VI.
Marine Propellers with Non-Reversible Engines and Internal Combustion Engines, ... VII., VIII., XI.
An Inquiry Regarding the Marine Propeller, ... IX., X.
Experiments with Rapid Cutting Steel Tools, ... XII.
The Hewitt Mercury Vapour Lamp, ... XIII.
The Uses of the Integraph in Ship Calculations, ... XIV., XV., XVI.
Some Modern Appliances Connected with Railway Crossings and Points, ... XVII., XVIII., XIX.
Motor Cars, ... XX., XXI., XXII., XXIII.

PREMIUMS AWARDED

FOR

PAPERS READ DURING SESSION 1902-1903.

PREMIUM OF BOOKS.

1.—To Mr KONRAD ANDERSSON for his paper on "Steam Turbines: With special reference to the De Laval Type of Turbine"; and

2.—To Dr J. BRUHN for his paper on "Some Points in Connection with the Riveted Attachments in Ships."

ADVERTISEMENT.

The responsibility of the statements and opinions given in the following Papers and Discussions rests with the individual authors; the Institution, as a body, merely places them on record.

MEMORANDUM OF ASSOCIATION

OF THE

INSTITUTION OF ENGINEERS AND SHIPBUILDERS IN SCOTLAND.

1. The Name of the Association is "THE INSTITUTION OF ENGINEERS AND SHIPBUILDERS IN SCOTLAND."

2. The Registered Office of the Association will be situate in Scotland.

3. The Objects for which the Association is established are :—

(1.) The Incorporation of the present Institution of Engineers and Shipbuilders in Scotland, under the 30th and 31st Victoria, cap. cxxxi., and

(2.) To facilitate the exchange of information and ideas amongst its Members, to place on record the results of experience elicited in discussion, and to promote the advancement of science and practice in Engineering and Shipbuilding.

(3.) The doing all such other lawful things as are incidental or conducive to the attainments of the above objects.

4. The Income and Property of the Association, whencesoever derived, shall be applied solely towards the promotion of the objects of the Association as set forth in this Memorandum of Association, and no portion thereof shall be paid or transferred directly or indirectly by way of dividend, bonus, or otherwise howsoever, by way of profit, to the persons who at any time are or have been Members of the Association, or to any of them, or to any person claiming through any of them.

Provided that nothing herein shall prevent the payment in good faith of remuneration to any Officers or Servants of the Association, or to any Member of the Association, or other person, in return for any services rendered to the Association.

5. The fourth paragraph of this Memorandum is a condition on which a Licence is granted by the Board of Trade to the Association, in pursuance of Section 23 of the "Companies Act. 1867." For the purpose of preventing any evasion of the terms of the said fourth paragraph, the Board of Trade may from time to time, on the application of any Member of the Association, impose further conditions, which may be duly observed by the Association.

6. If the Association acts in contravention of the fourth paragraph of this Memorandum, or of any such further Conditions, the liability of every Member of the Council of the Association, and also of every Member who has received any such dividend, bonus, or other profit as aforesaid, shall be unlimited.

7. Every Member of the Association undertakes to contribute to the Assets of the Association—in the event of the same being wound up during the time that he is a Member, or within one year afterwards, for payment of the Debts and Liabilities of the Association, contracted before the time at which he ceases to be a Member, and of the Costs, Charges, and Expenses of winding up the same, and for the adjustment of the rights of the Contributaries among themselves—such amount as may be required, not exceeding Ten Pounds, or, in case of his liability becoming unlimited, such other amount as may be required in pursuance of the last preceding paragraph of this Memorandum.

WE, the several persons whose names and addresses are subscribed, are desirous of being formed into an Association in pursuance of this Memorandum of Association :—

Names, Addresses, and Description of Subscribers—

DAVID ROWAN, 217 Elliot Street, Glasgow, Engineer.
W. J. MACQUORN RANKINE, C.E., LL.D., &c., 59 St. Vincent St., Glasgow.
M. R. COSTELLOE, 26 Granville Street, Glasgow, Measuring Surveyor.
BENJAMIN CONNOR, 17 Scott Street, Garnethill, Engineer.
JAMES DEAS, 16 Robertson Street, Glasgow, Civil Engineer.
JAMES M. GALE, 23 Miller Street, Glasgow, Civil Engineer.
W. MONTGOMERIE NEILSON, C.E., Hyde Park Locomotive Works, Glasgow.

Dated the Twelfth day of July, Eighteen Hundred and Seventy-One.

ROBERT ROSS, of Glasgow, Solicitor, Witness to the above signatures.

NOTE.—By Special Resolution passed on 2nd October, 1902, and confirmed on 20th October, 1902, the Articles of Association dated 12th July, 1871, as modified and altered in 1873 and 1880, were annulled, and the following Articles of Association were substituted.

The following Articles were registered with the Registrar of Joint Stock Companies on 28th October, 1902.

ARTICLES OF ASSOCIATION

OF THE

INSTITUTION OF ENGINEERS AND SHIPBUILDERS IN SCOTLAND.

SECTION I.—PRELIMINARY

1. For the purpose of registration, the number of Members of the Institution is declared unlimited.

2. These Articles shall be construed with reference to the provisions of the Companies Acts, 1862 to 1900; and terms used in these Articles shall be taken as having the same respective meanings as they have when used in those Acts.

3. The Objects of the Institution are those set forth in the Memorandum of Association. Objects of the Institution.

SECTION II.—CONSTITUTION.

4. The Institution shall consist of Members, Associate Members, Associates, Students, and Honorary Members. Constitution.

5. Candidates for admission as Members shall be persons not under 25 years of age, who have been educated as Engineers or Shipbuilders and have occupied a responsible position in connection with the Practice or Science of Engineering or Shipbuilding. Who may be Members.

6. Candidates for admission as Associate Members shall be persons not under 22 years of age, who have Who may be Associate Members.

been educated as Engineers or Shipbuilders and are engaged in the Practice or Science of Engineering or Shipbuilding.

Who may be Associates.

7. Candidates for admission as Associates shall be such persons, not included in the classes enumerated in the two preceding Articles, who, not being under 25 years of age, are considered by the Council eligible on account of their scientific attainments, or are considered by the Council qualified by knowledge bearing on Engineering Science or Practice.

Who may be Students.

8. Candidates for admission as Students shall be persons not under 18 years of age who are engaged in study or employment with a view to qualifying themselves as Engineers or Shipbuilders. Before attaining the age of 25 years they must apply for election as Members or Associate Members if they desire to remain connected with the Institution. They may not continue to be Students after attaining the age of 25 years.

Who may be Hon. Members.

9. Honorary Members shall be such distinguished persons as the Council shall recommend and the Institution shall appoint. The number of Honorary Members shall not exceed Twelve.

Members, etc., under former Articles of Association.

10. All persons whose names shall on 30th April, 1902, be on the Roll of the Institution under the former Articles of Association as Members, Associates, or Honorary Members, and whose Subscriptions are not more than two years in arrear at that date, shall become Members, Associates and Honorary Members respectively within the meaning of these Articles, and that without procedure of any kind on the part of such persons.

Graduates under former Articles of Association.

11. All persons whose names shall on 30th April, 1902, be on the Roll of the Institution under the former Articles of Association as Graduates, and whose Subscriptions are not more than two years in arrear at that date, shall be considered and treated as Students within the meaning of these Articles, and shall have the privileges, and be subject to the regulations affecting Students;

and, notwithstanding the terms of Article 8 hereof, such Graduates as are over 25 years of age shall be allowed to remain as Students for one year from and after 30th April, 1902, but no longer.

Abbreviated Titles of Members, etc.

12. The abbreviated distinctive titles for indicating the connection with the Institution shall be the following, viz.—For Members, M.I.E.S.; for Associate Members, A.M.I.E.S.; for Associates, A.I.E.S.; for Students, S.I.E.S.; and for Honorary Members, HON. M.I.E.S.

Candidates, how recommended and elected.

13. Every Candidate for admission as a Member, Associate Member, Associate or Student of the Institution, shall obtain the recommendation of at least three Members, such recommendation and the relative undertaking by the candidate being according to Form A contained in the Appendix. Such recommendation and undertaking shall be lodged with the Secretary, and the Council shall consider the same at their first Meeting thereafter, and if they approve the recommendation shall be mentioned in the notice calling the next general meeting of the Institution; and then, unless a ballot be demanded by at least five persons entitled to vote, the Candidate shall be declared elected. If a ballot be taken he shall be admitted if three-fifths of the votes are favourable; Members only being entitled to vote. The proposal for transferring any person from the Class of Students to the Classes of Associate Members or Members, or from the Class of Associate Members to the Class of Members, shall be according to Form B contained in the Appendix, and this form shall be subscribed by at least three Members and delivered to the Secretary for the consideration of the Council who shall, if they think fit, make the proposed transfer.

Honorary Members, how elected.

14. The granting of Honorary Membership to any person may be proposed at any Council meeting, and, if the Council, after consideration at their next meeting, approve of the proposal, intimation thereof shall be given by the Secretary in the circular calling the next general meeting of the Institution. At that

meeting unless a ballot be demanded by at least five persons entitled to vote, the person proposed shall be declared elected. If a ballot be taken then the person proposed shall be admitted if four-fifths of the votes are favourable; Members only being entitled to vote.

Members, &c. formally admitted.

15. Every person duly elected or admitted as a Member, Associate Member, Associate, Student, or Honorary Member, shall be notified in writing of his election or admission by the Secretary. At the first meeting of the Institution held thereafter at which he is present, he shall be introduced according to the ensuing form, viz. —The President or the Chairman of the Meeting, addressing him by name, shall say: "As President (or Chairman of this meeting) of the Institution of Engineers and Shipbuilders in Scotland, I introduce you as a Member (or Associate Member or Associate or Student or Honorary Member as the case may be). Thereafter the new Member, Associate Member, Associate, Student or Honorary Member shall sign the Roll of Members, etc., to be kept by the Secretary, and on making payment of any fees or subscriptions due he shall be entitled to receive a diploma. The diploma shall be signed by the President and the Secretary.

Diploma.

Rejected candidates not to be noticed in minutes—wish of Honorary Members to be obtained before being balloted for.

16. If any person proposed for admission into the Institution be not approved by the Council, or be rejected on being balloted for, no notice shall be taken of the proposal in the Minutes of the General Meetings, and such person shall not be proposed again for admission until after the expiry of one year from the date of such disapproval or rejection. Before the meeting of Council for considering any proposal to grant Honorary Membership it shall be ascertained from any person proposed to be made an Honorary Member, whether he will accept the honour, no notice being taken of the proposal in the Minutes unless he is elected.

SECTION III.—MANAGEMENT AND OFFICE-BEARERS.

Council, Management by.

17. The Direction and Management of the affairs of the Institution shall be confided to a Council, which shall consist of a President, six Vice-Presidents, and eighteen Councillors. Of the eighteen Councillors, not more than three may be Associates, the remainder being Members. Five Members of Council shall constitute a Quorum.

Constitution of Council—Five a Quorum.

Who may be President.

18. Members only shall be eligible for election as President. The President shall preside over all meetings of the Institution and Council at which he is present, and shall regulate and keep order in the proceedings. The President shall hold office for one year only, but shall be eligible for re-election at the expiry of the year.

Who may be Vice-Presidents.

19. Members only shall be eligible for election as Vice-Presidents. In the absence of the President, the Vice-Presidents in rotation shall preside at meetings of the Council and Institution. The Vice-Presidents shall hold office for three years.

Chairman to have casting vote.

20. In case of the absence of the President and all the Vice-Presidents, the meeting may elect any one of the Council, or any Member, to preside. In all cases the Chairman of any meeting shall have a Deliberative Vote and a Casting Vote.

Who may be Councillors.

21. Members and Associates only shall be eligible for election as Ordinary Members of Council, and shall hold office for three years, and not more than three Associates shall hold office in the Council at any one time.

22. Past Presidents of the Institution shall be *ex officio* Honorary Members of Council.

First Council.

23. The Office-Bearers in office at 30th April, 1902, shall continue in office till the First General Meeting of the Institution in October, 1902, when a new Council shall be elected in terms of these Articles. Such Office-

Bearers shall be eligible for election for the new Council. Of the new Council, two Vice-Presidents shall retire in October of each of the years, 1903, 1904, and 1905, their places being filled by election, and the persons elected shall hold office until the expiry of the terms of office. Similarly of the new Council, six Councillors (being five Members and one Associate) shall retire in October, 1903, and a like number in October, 1904, and the remainder in October, 1905, their places being filled by election at these dates respectively, and their successors retiring at the expiry of the terms of office, and so on thereafter from year to year. The Vice-Presidents to retire in October, 1903, and 1904, shall be determined by lot among the six Vice-Presidents first elected, and the Members of Council to retire in October, 1903 and 1904 shall be determined by lot among the Members of the Council first elected. The Vice-Presidents and the Ordinary Members of Council who fall to retire at the dates mentioned, or who fall to retire at any time on the expiry of their term of office, shall not be eligible for re-election in the same capacity until one year has elapsed from the date of retiral.

Retiral of Members of Council.

24. The Members of Council shall be elected by ballot at the Annual General Meeting, such meeting being the last Ordinary Meeting held in each month of April, but the new Office-Bearers elected at this meeting shall not enter office until 1st October following. In the election of President, Vice-Presidents, and Ordinary Members of Council from the Class of Associates, all Members, Associate Members, and Associates shall be entitled to vote. In the election of the other Members of Council only Members and Associate Members shall be entitled to vote.

Office-Bearers to to be elected by Ballot.

25. In March of each year the Council shall meet and prepare a list of names for the election of Council for the ensuing year. This list shall contain the name of the proposed President, and not less than two names of persons proposed by the Council for each

Lists for Election.

vacancy in the class of Vice-Presidents, Ordinary Members, and Associate Members of Council. This list shall be submitted to the Members at the Monthly Meeting preceding the Annual Meeting, and the Members present may by motion, duly seconded, propose any additional names for any of the offices.

Ballot Lists to be sent to Members.

26. Fourteen days before the General Meeting in April of each year the list as proposed by the Council for the election of Members and others to fill the vacancies in the Council for the ensuing year, with such additions as may have been made thereto under Article 25, shall be printed and sent to all Members, and Associate Members, and the list shall serve as a ballot paper. A similar list shall be printed and sent to all Associates containing the names of those for whom they are entitled to vote. Those persons entitled to vote may vote for as many names on the list as there are vacancies to be filled. In the event of any ballot paper not containing names equal to the number of vacancies to be filled such ballot paper shall be treated as a spoiled paper.

The ballot papers may be sent by post or otherwise to the Secretary so as to reach him before the day and hour named for the Annual General Meeting, or they may be presented personally by those entitled to vote, at the opening of the Meeting.

Vacancies occurring during the Session to be filled up by the Council.

27. A vacancy occurring during any Session in consequence of the resignation or death of any Office-Bearer (except the President) shall be filled up by the Council, until the next Annual General Meeting for electing Office-Bearers. Any vacancy in the office of President shall be filled up at the next General Meeting of the Institution. A person elected to fill a vacancy shall hold office for the period unexpired of the term of office of the Office-Bearer resigning or dying or being removed from office, and he shall be eligible for re-election.

SECTION IV.—POWERS AND DUTIES OF COUNCIL.

Meetings of Council.

28. The Council shall meet as often as the business of the Institution requires, and during each Session—that is from October till April—the Council shall meet at least once a month.

Committees.

29. The Council may delegate any of their powers to Committees consisting of such Members of the Council as they think fit, and they may appoint Committees to report to them upon special subjects. In particular, they shall appoint a Finance Committee to superintend the finances of the Institution, a Library Committee to superintend Library arrangements, and a Papers Committee to arrange for papers being submitted at meetings of the Institution. The Minutes of all Committees shall not take effect until approved by the Council. The President shall be *ex officio* a member of all Committees.

Honorary Treasurer.

The Convener of the Finance Committee shall be styled Honorary Treasurer. He shall be elected by the Council from their number, and notwithstanding the provision for retiral in Article 23, he shall be entitled to retain the office of Honorary Treasurer for three years from the date of his appointment.

Bye-Laws, etc.

30. The Council may make Bye-Laws and Regulations for carrying on the business of the Institution, and from time to time, alter, amend, repeal, vary, or add to the same; but any Bye-Law or Regulation, or any alteration or amendment thereon, or addition thereto, shall only come into force after the same has been confirmed at a General Meeting of the Institution, and no Bye-Law or Regulation shall be made under the foregoing which would amount to such an addition to or alteration of these Articles as would only be legally made by a Special Resolution passed and confirmed in accordance with Sections 50 and 51 of the Companies Act, 1862. The Council shall

Investments.

be entitled to invest the Funds of the Institution as they think fit, on such security, heritable or moveable, as to

them shall seem proper, and may alter or vary the investments from time to time. The Council may purchase or sell property, heritable or moveable, for the use of the Institution, and may borrow money on the security of the property of the Institution, subject to confirmation by the Institution at an Extraordinary Meeting called for the purpose.

Council may purchase or sell.

Borrowing.

31. The Council shall appoint a Secretary and a Treasurer, and any other official or servant required to carry on the work of the Institution, and the appointments made by the Council shall be on such terms and conditions as the Council may think fit.

Officials to be appointed.

32. All questions in or before the Council shall be decided by vote, and such vote shall be taken by a show of hands or by ballot; but at the desire of any four Members present the determination of any subject shall be postponed till the next meeting of Council.

Votes at Council Meetings.

SECTION V.—SECRETARY AND TREASURER.

33. Subject to regulation by the Council, the Secretary (who may also act as Treasurer) shall conduct the correspondence of the Institution; attend all Meetings of the Institution, of the Council, and of Committees; take Minutes of the proceedings of such Meetings, and enter them in the proper books provided for the purpose; read at all Meetings of the Institution and Council respectively the Minute of the preceding Meeting, and all communications received by him or ordered to be read; superintend the publication of such papers as the Council may direct; take charge of the Library; issue notices of Meetings; issue Diplomas; keep the Roll and Registers; and perform whatever other duties are indicated in the Regulations of the Institution as appertaining to his department or set forth in the terms of his appointment.

Duties of Secretary.

34. Subject to regulation by the Council, the duties of the Treasurer shall be to take charge of the property

Duties of Treasurer.

of the Institution (excepting books, papers, drawings, models, and specimens of materials, which shall be in the charge of the Secretary); to receive all payments and subscriptions due to the Institution; to direct the collection of subscriptions; to pay into one of the Glasgow Banks, in the joint names of the President, Honorary Treasurer, and himself, the cash in his hands whenever it shall amount to Ten Pounds; to pay all sums due by the Institution, but not without an order signed by two Members of the Finance Committee, and to keep an account of all his intromissions in the General Cash Book of the Institution, which shall upon all occasions be open to inspection of the Finance Committee, and which shall be balanced annually, as at 30th September. The Treasurer shall prepare an Annual Statement of the Funds of the Institution, and of the receipts and payments of each financial year, which shall be audited by the Auditor aftermentioned, and this Statement of the Funds and an Inventory of all the property possessed by the Institution, and a List of the Members, Associate Members, Associates, and Students, whose subscriptions are in arrear, shall be submitted to the First Meeting of the Council, in October.

Annual Report.

35. An Annual report upon the affairs of the Institution shall be drawn up under the direction of the Council at a meeting to be held not less than ten days before the General Meeting of the Institution in October. This report shall embody reports from the representatives elected by the Council to various official bodies.

SECTION VI.—AUDIT OF ACCOUNTS.

Auditor and duties.

36. An Auditor, who must be a Chartered Accountant of at least five years standing, shall be appointed by the Council at their meeting preceding the last General Meeting of each Session, to examine the accounts and books of the Treasurer, and the Annual Financial Statement or Statements of the Funds, and that State-

ment along with the Audit and Annual Report, shall be printed in the notice calling the First General Meeting of the Institution in October, and shall be read at that meeting.

SECTION VII.—MEETINGS AND PROCEEDINGS OF THE INSTITUTION.

Ordinary General Meetings every four weeks during the Session.

37. The Institution shall hold ordinary meetings for reading papers, and for discussing matters connected with the objects of the Institution; and such meetings shall take place regularly, at least once in every four weeks during each Session; and may be adjourned from time to time. The Sessions shall commence in October, and continue until the month of April next following, inclusive. No business shall be transacted at any Meeting, unless 25 Members shall be present.

At the General Meeting in April of each year for the election of Office-Bearers, the order of business shall be:—

(1) Minutes of last meeting.

(2) To read and consider the reports of the Council and Treasurer.

(3) The meeting shall nominate two Scrutineers who shall be members, and shall hand to them the ballot-box containing the voting papers for the new Office-Bearers.

(4) The Scrutineers shall receive all ballot papers which may have reached the Secretary, and all others which may be presented at the Meeting. The Scrutineers shall then retire and verify the lists and count the votes, and shall, before the close of the meeting, report to the Chairman the names which have obtained the greatest number of votes subject to the conditions of the ballot. The Chairman shall then read the list presented by the Scrutineers, and shall declare the gentlemen named in the list to be duly elected, provided always that the list does

not contain more names than there are vacancies to be filled.

Ordinary Meetings—order of business.

38. At every ordinary meeting of the Institution, the Secretary shall first read the minutes of the preceding meeting, which, on approval, shall then be signed by the Chairman of the meeting at which the minutes are read and approved. The Secretary shall next read any notices which may have to be brought before the meeting; after which any Candidates for admission may, if necessary, be balloted for, and any new Members shall be admitted. Any business of the Institution shall then be disposed of, after which notices of motion may be given. The paper or papers for the evening shall then be read and discussed. Each Member shall have the privilege of introducing one friend to the General Meetings, whose name must be written in the Visitors' Book together with that of the Member introducing him; but if the introducing Member be unable to attend the Meeting he may send with the visitor a card signed by him addressed to the Secretary. During such portions of any of these Meetings as may be devoted to any business connected with the management of the Institution, visitors may be requested by the Chairman to withdraw.

Nature of papers to be read.

39. All papers read at the meetings of the Institution must be connected with the Science or Practice of Engineering or Shipbuilding, and must be accepted by the Papers' Committee before being read.

Proceedings to be published.

40. The papers read, and the discussions held during each Session, or such portion of them as the Council shall select, shall be printed and published forthwith.

Explanatory notes after reading of papers may be published.

41. Explanatory notes communicated after the reading or discussing of papers may be printed in the *Transactions*, if the Council see fit.

Copyright of papers shall be the property of the Institution.

42. The copyright of any paper read at a meeting of the Institution, with its illustrations, shall be the exclusive property of the Institution, unless the publication thereof by the Institution is delayed beyond the commencement

of the Session immediately following that during which it is read; in which case the copyright shall revert to the author of the paper. The Council shall have power, however, to make any arrangement they think proper with an author on first accepting his paper.

Members, &c., to receive copies of *Transactions*— Authors 30 copies of their papers.

43. The printed *Transactions* of each Session of the Institution shall be distributed gratuitously, as soon as ready, to those who shall have been Members, Associate Members, Associates, or Honorary Members of the Institution during such Session, and they shall be sold to the public at such prices as the Council shall fix. Authors of papers shall be entitled to thirty separate copies of their papers, with the discussions, as printed in the *Transactions*.

Special Meeting may be called by the Council, or on requisition by 25 Members.

44. Extraordinary or Special Meetings may be called by the Council when they consider it proper or necessary, and must be called by them on receipt of a requisition from any 25 Members, specifying the business to be brought before such meeting.

Voting.

45. Any question which, in the opinion of the President or the Chairman of the meeting of Council and Institution, is of a personal nature, shall be decided by ballot; all other questions shall be decided by a show of hands, or by any convenient system of open voting.

Who may Vote.

In all cases, not hereinbefore provided for, only Members, Associate Members, and Associates, shall be entitled to vote. Every Member, Associate Member, and Associate, shall have one vote only, which must be given personally.

Section VIII.—SUBSCRIPTIONS OF MEMBERS AND OTHERS.

Annual Subscription payable.

46. Each Member shall, on election, pay an entrance fee of £1, and for the current and for each Session thereafter an annual Subscription of £2.

Each Associate Member shall, on election, pay an entrance fee of £1, and for the current Session and each

of the two following Sessions an Annual Subscription of £1, and thereafter an Annual Subscription of £1 10s.

Each Associate shall, on election, pay an entrance fee of £1, and for the current Session and each Session thereafter an Annual Subscription of £1 10s.

Each Student shall pay an Annual Subscription of Ten Shillings, but no entrance fee.

In the case of Members, Associate Members, Associates, and Students, elected during March and April no subscription shall be payable for the current Session.

47. Honorary Members shall be liable for no contribution or subscription or entrance fee.

48. The Liability of any Member or Associate for future Annual Subscriptions may be commuted by the following payments, viz., in the case of a Member, by the payment of £25; and in the case of an Associate, by the payment of £20 and, in the event of such payment being made by a Member or Associate on his admission to the Institution, the same shall be in full of Entry Money as well as future Annual Subscriptions.

49. All persons transferred, in terms of Articles 10 and 11, to the Roll of Members, Associates, or Students, to be kept under these Articles, shall not be liable to pay any entrance fee, but for the Session, 1902-3, and thereafter they shall be liable for the Annual Subscription applicable to the Class to which they are transferred. All persons who, as Members or Associates under the former Articles of Association, had commuted their Annual Subscriptions by a capital payment to the Institution shall not be liable for any subscription, notwithstanding the terms of this Article.

When Annual Subscriptions due.

50. Annual Subscriptions shall become due on the first day of October in each year, and must be paid before 1st January following.

Members, etc., not entitled to vote if in arrear.

51. No Member or Associate Member or Associate, whose subscription is in arrear, shall be entitled to vote at any meeting of the Institution nor to receive copies

of papers or proceedings while the subscription remains unpaid.

52. Any Member, Associate Member, Associate or Student, whose subscription is more than three months in arrear shall be notified by the Secretary. Should his subscription become six months in arrear he shall be again notified by the Secretary and all his rights in connection with the Institution shall be suspended. Should his subscription become one year in arrear he shall be removed from the roll of the Institution unless the Council may deem it expedient to extend the time for payment.

Members, etc., retiring from the Institution.

53. Any Member, Associate Member, Associate, or Student retiring from the Institution, shall continue to be liable for annual subscriptions until he shall have given formal notice of his retirement to the Secretary. Contributions payable by Members, Associate Members, Associates or Students, shall be debts due to the Institution, and may be recovered by the Treasurer.

Remission of Subscription in certain cases.

54. In the case of any Member or Associate who has been long distinguished in his professional career, but who, from ill health, advanced age, or other sufficient cause, does not continue to carry on a lucrative practice, the Council, if they think fit, may remit the annual subscription of such Member or Associate, and they may remit any arrears due by him. Any such case must be considered and reported upon to the Council by a Committee appointed by the Council for the purpose.

Council may refuse to receive subscriptions in certain cases.

55. The Council may refuse to continue to receive the subscription of any person who shall have wilfully acted in contravention of the regulations of the Institution, or who shall, in the opinion of the Council, have been guilty of such conduct as shall have rendered him unfit to continue to belong to the Institution, and may remove his name from the Register, and he shall thereupon cease to be a Member, Associate Member, Associate or Student (as the case may be) of the Institution.

Section IX.—GENERAL POWERS AND PROVISIONS.

Powers of Institution in General Meeting.

56. Any Extraordinary or Special Meeting of the Institution, duly called, shall have power, by a majority in number of the persons present thereat entitled to vote, from time to time, to review the decisions or determinations of the Council; to remove Members of Council; to expel Members, Associate Members, Associates, Students, or Honorary Members, from the Institution, and to expunge their names from the Roll; and to delegate to the Council all such further powers as may be considered necessary for efficiently performing the business of the Institution. At any Extraordinary or Special Meeting 50 Members shall be a quorum.

To delegate powers to Council.

Common Seal.

57. The Institution shall have a common seal, which will be under the charge of such of the Office-Bearers as the Council may appoint, and all instruments bearing the seal shall be countersigned as the Council shall direct.

Section X.—NOTICES.

Notices.

58. Notices requiring to be served by the Institution upon its Members, Associate Members, Associates, Students, or Honorary Life Members, may be served either personally, or by leaving the same, or by sending them through the post; and notices so posted shall be deemed to have been duly served. No Members, Associate Members, Associates, Students, or Honorary Life Members, who have not a registered address within the United Kingdom, shall be entitled to any notice; and all proceedings may be had and taken without notice to any such.

Inducise of Notices.

59. Notices for any General or Extraordinary or Special Meeting of the Institution must be given by the Secretary to all Members, Associate Members, Associates, or Honorary Life Members, at least four days before such meeting. Notices of any adjourned meeting shall be given at least two days before the

adjourned meeting is held. Such notices shall specify the nature of the business to be transacted and no other business shall be transacted at that Meeting.

Notices.

60. Notices for any meeting of Council must be given by the Secretary at least four days before such meeting. Notices for the meetings of Committees shall be given as the Council shall direct.

Computation of Inducise.

61. In computing the *inducie* of any notice the day on which the same is delivered shall be reckoned as an entire day

APPENDIX.

FORM A.

Form of Recommendation and Undertaking.

A. B.....of.....being upwards of..... years of age and being desirious of belonging to the Institution of Engineers and Shipbuilders in Scotland, I recommend him from personal knowledge as in every respect worthy of that distinction because (here specify distinctly the qualifications of the Candidate according to the spirit of Articles 5, 6, 7, and 8).

On the above grounds I beg leave to propose him to the Council as a proper person to belong to the Institution.

.....*Member.*

*Dated this.....day of.....*19

We, the undersigned, from personal knowledge, concur in the above recommendation.

.....*Member.*

.....*Member.*

I, the said A B., do hereby promise that in the event of my election I will abide by the Rules and Regulations of the Institution, and that I will promote the objects of the Institution as far as may be in my power.

.....

FORM B.

Form for Transfer from one Class to another.

A. B.....of.....having been a..... of the Institution of Engineers and Shipbuilders in Scotland for.....years, and being desirous of becoming a.....of the Institution, we, from personal knowledge, recommend him as in every respect worthy of being elected a..... of the Institution.

..... *Member.*

..... *Member*

.....*Member.*

I, the said A. B., do hereby promise that in the event of my election I will abide by the Rules and Regulations of the Institution, and that I will promote the objects of the Institution as far as may be in my power.

.....

The Council having considered the above recommendation and undertaking approve of the same.

....*President (or Chairman).*

*Dated this.....day of.....*19

BYE-LAWS.

MEDALS AND PREMIUMS.

Marine and Railway Engineering Medals.

1. Each of the two Medals founded by subscription, for the best paper in the Marine and Railway Engineering Departments respectively, shall be awarded by the vote of a General Meeting, not oftener than once in each Session.

Institution Medal.

2. The Council shall have power to offer annually a Medal for the best paper on any subject not comprehended by the Marine and Railway Engineering Medals. Such additional medal to be called the Institution Medal, and to be paid for out of the Funds of the Institution, until a Special Fund be obtained. This medal also shall be awarded by the vote of a General Meeting.

When Medals may not be awarded.

3. If it shall be the opinion of the Council that a paper of sufficient merit has not been read in a particular department during any Session, the Medal shall not be given in that department; and, in the case of the Marine and Railway Engineering Medals, the interest arising from the particular Fund shall be added to the principal.

Medals and Books may be awarded.

4. If the Person to whom a Medal may be awarded shall express a wish to receive a Bronze Medal, accompanied with the extra value in Books, in lieu of the ordinary Gold Medal, the award shall be made in that form. The Council may recommend premiums of Books in lieu of, or in addition to, the Gold Medals. The value of such premiums of Books to be determined by the Council.

MANAGEMENT OF THE LIBRARY.

Appointment of Library Committee.

5. The Council, at their first Meeting each Session, shall appoint eight of their number to form a Library

Committee, one of the eight to be Honorary Librarian and Convener of the Committee. Three Members of the Committee shall form a quorum.

Secretary shall have charge of Library.

6. The Secretary of the Institution shall have charge of the Library, and shall also act as Secretary of the Library Committee.

Powers of Library Committee.

7. The Library Committee, subject to the sanction of the Council, shall expend in Books and Library expenses the sums placed at their disposal, and, subject to the approval of the Council, may make Bye-Laws for the management of the Library, and appoint Assistants. The sum of £30 or thereby shall be expended annually out of the funds of the Institution, in the purchase of Books for the Library, in addition to the ordinary expenditure in binding, &c.

Duties of Library Committee and Annual Report.

8. The Library Committee shall annually make an examination of the property in connection with the Library, and report to the Council, detailing the state of the Library affairs.

LIBRARY BYE-LAWS AS TO USE OF BOOKS.

When Library is to be open.

9. Except during Holidays and Saturdays, the Library shall be open each lawful day from 1st May till 30th September inclusive, from 9.30 a.m. till 5 p.m. On Saturdays the Library shall be open from 9.30 a m. till 1 p.m. On the 1st October and thereafter throughout the Winter Session the Library shall be open each lawful day from 9.30 a.m. till 8 p.m., except on Meeting nights of the Institution and Royal Philosophical Society, when it shall be closed at 10 p.m. The Library shall be closed for the Summer Holidays from the 11th July till 31st July inclusive.

Who may borrow books.

10. Books shall not be lent to any persons except Members, Associate Members, Associates, Students or Honorary Members of the Institution; but a person entitled to borrow books may send a messenger with a signed order.

Books for Coonsultation only.

11. The books marked with an asterisk in the Catalogue shall be kept for consultation in the Library only, and shall not be lent.

Librarian to keep Accession Book.

12. The Librarian and Assistant Librarian shall take their instructions from the Secretary of the Institution. They shall keep an Accession Book, in which shall be entered the particulars of all books purchased for or donated to the Library.

Register of books lent kept.

13. The Librarian, or Assistant Librarian, shall keep a Register, in which he shall enter the titles of the book or books lent, the date of lending, the name of the borrower, and the date of the return of the book or books to the Library.

Borrower to sign for books.

14. The borrower of the book or books, or, in his absence, the bearer of his order, shall sign his name to the entry of such borrowing in the Librarian's Register.

Librarian to certify return of books.

15. The Librarian, or Assistant Librarian, shall sign his initials to the date of the return of the book or books.

Books damaged to be entered in Register. Intimation to Library Committee, and notice to last borrower.

16. The borrower shall be responsible for the safe return of the book, and if it be damaged or lost he shall make good such damage or loss. Should books be returned in a damaged condition, the Librarian, or Assistant Librarian, shall immediately make an entry of the fact in the Register, and report the same to the Library Committee without delay; and he shall give notice in writing of such entry, and report to the person from whom he last received the book, within three clear days of the receipt of the book, exclusive of the day of receiving the book and the day of giving such notice.

Number of books which may be borrowed at one time.

17. No person shall be entitled to borrow, or have in his possession at one time, more than two complete works belonging to the Library, or two volumes of any periodical.

Persons in Arrears of Subscription not to have use of Library.

18. No person being six months in arrears with his subscription to the Institution shall be at liberty to use the Library or Reading Room.

Time books may be obtained.

19. No borrower shall have the right to retain a book longer than thirteen clear days, exclusive of the days of borrowing and returning; and written notice shall be sent to the borrower one day after the time has expired. In no case shall any book be kept longer than twenty clear days.

Lots to be drawn when two may apply for the same book.

20. In the event of two or more persons applying for the same book at the same time, the applicants shall draw lots for priority.

Introduction of friends to Reading Room.

21. Each Member shall be entitled to introduce a friend to the Reading Room, whose name shall be written in the Visitors' Book, together with that of the Member introducing him.

Annual scrutiny of books.

22. All books belonging to the Library shall be called in for inspection, and the lending out of books shall be suspended in each year for one week, being the last seven clear days of March; and all Members shall be required, by an intimation to be inserted in the notice calling the preceding meeting of the Institution, to return all books in their hands to the Library on or before the day next preceding the period before mentioned.

NOTE.—The Library and Reading Room are open to Members, Associate Members, Associates, and Students; and the Library of the Philosophical Society is open for consultation.

WILLIAM BROWN, *Convener.*
WM. M. ALSTON.
PROF. A. BARR, D.Sc.
W. A. CHAMEN.
E. HALL-BROWN.
WILLIAM MELVILLE.
JOHN STEVEN.
JOHN WARD.
EDWARD H. PARKER, *Secretary.*

21*st April*, 1903.

INSTITUTION
OF
ENGINEERS AND SHIPBUILDERS
IN SCOTLAND
(INCORPORATED).

FORTY-SEVENTH SESSION—1903-1904.

Mr JAMES GILCHRIST, Vice-President, in the Chair.

27th October, 1903.

THE CHAIRMAN said that the Institution was now entering upon its Forty-seventh Session. For thirty-five Sessions he had himself been connected with the Institution, and during all those years it had always been the custom on the opening night to hear the President's address. On that occasion he would be lacking in duty as their Vice-President if he did not state the reason why their President was absent. Many of them were doubtless aware that Mr Archibald Denny, through nothing else but indomitable hard work, had allowed himself to get "run down," and had become so feeble that his medical adviser had ordered complete rest for a considerable time. From the very active life which Mr Denny had led for some years back, and the very lively interest which he took in all things pertaining to his business, it could well be imagined how impatient he felt when he found that all his best schemes must, in the meantime, be laid aside, and he (the Chairman) could safely say that one of his best schemes was the work which he

expected to be done by the Institution of Engineers and Shipbuilders in Scotland. His own words, contained in a letter addressed to the Council, were, "I am sore distressed at the additional trouble this will give the Council, and have done my best to avoid it, but failed. I am looking forward with great interest to my work for the Institution and hope to be of some service, but I know that my Vice-Presidents and Council will so arrange matters that the Institution will in no way suffer from my absence, and I hope to be back again all the more fitted to do my best for the Institution." He might also say that Mr Denny had his Presidential Address most carefully prepared to deliver that evening, but the fates had gone against him. They must, therefore, look forward to his coming back as soon as possible, when they would have the pleasure of listening to him. He felt sure that everyone present sympathised with their worthy President, and earnestly hoped that in a few weeks he might be again among them greatly restored in health and fit for the many duties devolving upon him.

During the last Session death had removed from their midst no less than 31 persons, but perhaps the one they felt the loss of most was their late President, Mr Foulis. During the time in which he held office no effort on his part was spared to make the Institution a success. He was most regular in his attendance at Council, Committee, and General Meetings until the last few months of his reign, when illness fell upon him and he had most reluctantly to give up. Only those who knew him intimately could thoroughly appreciate the goodness of his nature and his more than ordinary desire to do everything well. In short, he was a man whom everybody esteemed, a man who "did justly, loved mercy, and walked humbly before God." He earnestly hoped that they might, in the Institution, have many Presidents after his stamp.

They were now entering upon a fresh era of their existence A new constitution had been adopted, which the Council hoped would add dignity to the Institution and give it a name equal to

that of any of the leading scientific bodies in the kingdom, but in order to achieve success they must look more to their young men to come forward and assist. It was not enough for young men to sit quietly by listening to what their elders said; they must be "up and ready," zealous for good works, and showing that what was good enough for their fathers was not good enough for them. He would not say more, because he had no intention of giving an address, but he hoped that "onward" would be the watchword of the Institution.

SUPERHEATED STEAM.

By Mr F. J. Rowan (Member of Council).

(SEE PLATES I., II., III., AND IV.)

Read 27th October, 1903.

Superheated steam offers a most interesting subject for study, whether it is considered from the abstract and theoretic side or from the concrete and practical side.

With the former are connected the thermo-dynamic propositions and calculations which assume a perfectly gaseous condition for superheated steam, and deduce its efficiency accordingly. This view of the subject is fully dealt with in Rankine's "Steam Engine and Other Prime Movers," in Prof. R. H. Thurston's "Superheated Steam" (Am. Soc. Mech. Eng., vol. xvii.), and in Peabody's "Thermo-dynamics of the Steam Engine." The literature devoted to the practical side of the subject is voluminous, and contains the history of the various attempts to introduce the use of superheated steam, with the failures of the early and the successes of the later forms of apparatus.

Historical.

Although the "flash" boilers, which date from that of John Payne, in 1736, undoubtedly produced steam which was more or less superheated, necessarily on account of the method of steam production adopted in those boilers, yet the design of Sir William Congreve, in 1821, was perhaps the earliest attempt to treat steam after its formation in a boiler, his object having been "to increase its *volume*." It is not likely that the importance of increasing its *temperature* would be recognized at so early a date.

The system invented by Jacob Perkins, in 1822, was also, in one aspect of it, a method of producing superheated steam, although the degree of superheat was probably small. In this case the

water in the boiler was heated to 400° or 500° F. without allowing steam to form, the boiler being quite full of water. When a small additional quantity of water was then forced into the boiler by a pump, a corresponding quantity of the superheated water escaped by a valve into a steam pipe, where it instantly flashed into steam.

French writers (such as M. Maurice Miet, in "Le Génie Civil") mention that superheating apparatus was designed by Becker, in 1827; Trevithick,* in 1828 or 1832; Raffard,† in 1848; de Quillac, in 1849; Moncheul, in 1850; and by Hirn, in 1855; but, except in the case of the last of these, no permanent benefits seem to have been secured. Trevithick reported, in 1828, on the engines of the Brinner Downs Mine in Cornwall, where the steam pipes and cylinders had been enclosed in brick-built flues, with a fire-grate conveniently attached in order, by heating them up, to prevent condensation. The idea was merely to make a better non-conducting covering than that of the sawdust used at a neighbouring mine, but unexpected economy was realized, the duty of the engine having been increased from 41 to 63 million foot lbs. per bushel (84 lbs.) of coal. When the superheating flues consumed 5 bushels of coal per 24 hours, the steam boiler required 67 bushels, which quantity became 108 bushels when the superheating was not employed, thus showing a saving of 33·4 per cent.

Consequently, in 1832, Trevithick patented the arrragement of boiler, superheater, and engine shown in Fig. 1. The boiler was composed of vertical water-tubes set in a circle, and joined to an annular chamber at top and bottom; the superheater pipes were U-shaped, dependent over the fire, with all joints in the upper part of the boiler and clear of the fire gases, which were led off into the cylinder jacket on their way to the funnel or chimney.

The investigations of Hirn, most of which were published in

* Spineux, in 1840. See "Engineering," 14th Feb., 1890, p. 174.

† See also Prof. R. H. Thurston on Superheated Steam, Trans. Am. Soc. Mech. Eng., vol. xvii., p. 490.

the Bulletin of the Industrial Society of Mulhouse, or in that of the Alsatian Society of Steam Users, have been the means of encouraging the engineers of Alsace and the adjoining country, so that at the present day Germany holds the lead in the successful application of numerous forms of superheaters, and in the use of superheated steam. Hirn patented, in 1855, a form of superheater which he called a "hyper-thermo-generator," formed principally of cast iron.

The late Mr John Penn (Proceedings Inst. Mech. Eng., 1859) ascribed his knowledge of the subject to Mr. Thomas Howard, of Rotherhithe, who had tried superheated steam about 1831 or 1832, and to Dr Haycraft, of Greenwich, who had taken up the subject after Mr Howard. It is, however, stated elsewhere that as early as 1831 Dr Henry Haycraft himself obtained a patent for superheated steam, and believed that he had discovered a power ten times greater than ordinary steam.

In 1849, Mr James Frost, of Brooklyn, communicated a paper to the Rumford Committee of Cambridge University, in which he claimed that he had increased the power of steam from four to six times, and that at 650° F. a change took place, a new vapour, which he called "stame," being formed. This was subsequently proved to be merely perfectly dry steam or "steam gas," but the term "stame" was used for some years in controversies which arose in technical journals. The Committee of the University reported unfavourably on Mr Frost's claims, but several experimenters corroborated his statements by results obtained at a subsequent date.

The subject was investigated by Mr B. F. Isherwood in 1854, 1860, and in 1862-64, and his results were published in the Journal of the Franklin Institute (vol. xxvii., 3rd Series) in his "Experimental Researches" (vols. i. and ii.), and in the official reports of the U. S. Government. The first experiments were made with the Wethered system of using a mixture of saturated and "surcharged" steam; the second with Waterman's apparatus, which consisted of a steam jacket around a steam supply valve

connected with a superheating arrangement when desired, and also a peculiar throttle valve. This plan was arranged for "the steam to heat itself by means of the differences of temperature due to differences of pressure produced by the use of a simple throttle valve." This was evidently a plan to produce the small amount of superheating derived from wire-drawing the steam, and it proved abortive in these experiments, even with the steam jacket, because "so great were the refrigerating influences in the cylinder that an adheating of 31·7° possessed by the steam on entering the valve chest, obtained by the Waterman system of throttling, was inadequate to the production of any net gain in the cost of power." The experiments undertaken for the U. S. Government were more varied, and were carried out principally in steamers or marine engines, and to much higher temperatures than had formerly been used.

Messrs C., J., & S. Wethered, who were large woollen manufacturers in Baltimore, U.S.A., had been experimenting for some time before they applied for a patent, in May, 1853, for the employment of a mixture of superheated with saturated steam in the cylinders of steam engines. Their superheater consisted of a pipe led from the steam space of the boiler at the upper part and near the rear end, and continued in a coil in the combustion space directly over the fire and in the heating flues. This superheater had about 3 square feet of surface per nominal H.P. Mr Wethered laid great stress upon his employing two steam pipes, and reckoned that the admixture of saturated with superheated steam preserved the cylinder and valve surfaces, whilst giving the benefit of superheat. (See Min. Proc., Inst. C.E., 1860, vol. xix., p. 462*; and Trans. Inst. Mech. Eng., Jan., 1860, p. 85). This apparatus was in different forms tried in the P. and O. Company's steamers, in H.M.S. "Dee," and in the Admiralty yacht "Black Eagle," with good results. An apparatus on similar lines was said to have been supplied by Messrs Boulton & Watt to the steamer "Great Eastern" about the year 1862 ("Bourne on the Steam Engine," p. 242), but this does

* See also vol. xviii., p. 277.

not clearly appear from the illustrations given by Bourne. Although excellent results were obtained in several instances of the use of Messrs Wethered's plan, yet it was proved that an admixture of ordinary with superheated steam was unnecessary, because the mean temperature arrived at was precisely that of moderately superheated steam alone. The effects of the Wethered mixture could be obtained when a temperature of not over 360° F. was employed in the superheated steam. Experiments made by Mr Isherwood with the Wethered plan in New York, in 1853, were, however, the means of spreading the belief that the presence of the saturated steam provided a lubricating quality, which was absent from unmixed superheated steam. (Journal of the Franklin Inst., vol. xxvii., 3rd Series, pp. 257-261). Consequently several patents were taken out in America for modifications of the Wethered plan by Cornell, 1867; Stone, 1859-1860; Brown & Gregg, 1865; and Carvalho, 1860. Carvalho's patent aimed at preventing the action on certain qualities of iron which had been noticed in steam engines, and had been ascribed to the decomposition of the superheated steam at high temperature. Such action was, however, more likely to occur in the pipes or tubes employed as superheaters, and subjected to the high temperatures of the flame or hot gases in the combustion chamber or flues in which the superheaters were placed, and the deterioration of the metal surfaces of cylinders and slide-valves and faces must be ascribed to other causes.

Bourne, in his "Treatise on the Steam Engine," describes the superheaters constructed by R. Napier & Sons, Lamb & Summers, W. Beardmore, and Thomas Richardson & Sons, the last having been designed by G. W. Jaffrey; and in a paper by Mr John N. Ryder to the Institution of Mechanical Engineers (Proceedings, January, 1860) there are descriptions of the superheaters of Parson & Pilgrim and of D. Patridge, with some account of their action.

The papers by Mr William Patchell (in Proc., Inst. Mech. Engineers, April, 1896) and by Prof. William Ripper (in Min. Proc., Inst. C.E., vol. cxxviii., May, 1897, p. 60)

are amongst the earliest of those which deal with the more recent practice in the use of superheated steam, and may be said to mark the period of the revival of any great degree of interest in it as far as this country is concerned. Professor R. H. Thurston's able treatise on the same subject, "Superheated Steam: Facts, Data, and Principles relating to the Problem" (in Transactions of the American Society of Mechanical Engineers, vol. xvii., p. 488), which was read in May, 1896, is another prominent landmark in connection with it. From that time onwards the Minutes of Proceedings of the Inst. C.E. are seldom without records of investigations made on the Continent of Europe with different forms of steam superheaters, and many papers have appeared elsewhere.

Designs of Superheaters.

The early forms of superheaters used in this country were placed above the boiler at the base of the funnel in the case of marine boilers, with which they were almost exclusively used. One of the earliest was that introduced by *John Penn & Son*, in the P. and O. Company's steamer "Valetta" (see Trans., Inst. Mech. Eng., 1859, p. 195) Fig. 2. The engines were of 260 nominal H.P., and the boilers were of Lamb & Summers's design, the superheaters being placed in the uptake outside the ends of the vertical flues, which in Lamb's arrangement took the place of horizontal flue tubes. Two horizontal faggots of wrought iron tubes, 2 inches in diameter inside and 6 feet 3 inches long, formed the superheater, each bundle consisting of 44 tubes. They were placed in vertical rows, with clear spaces between the rows horizontally for allowing access in cleaning the boiler flues. The tubes were fixed into three flat chambers made of wrought iron, welded up at the corners, and closed each with a single flange joint. The steam from the boiler entered the centre chamber through a stop-valve, and was taken off from the end chambers by other stop-valves communicating with the steam pipes to the engine. The total area of superheating surface, including the wrought iron chambers,

was 374 square feet in each of the two boilers. The pressure of steam then used was 20 lbs. per square inch, and the steam was superheated 100°, or from 260° up to 360° or 370° F.

Patridge's superheater, Fig. 3, consisted of a cylinder filled with vertical tubes, placed vertically over the uptake, and resting on the steam chest at the base of the chimney (see Trans., Inst. Mech. Eng., 1860, p. 25). The furnace gases passed up through the tubes and through an annular space surrounding the cylinder between it and the chimney, and the steam was passed across the cylinder and over a vertical baffle plate in the centre, by means of steam pipes arranged on each side at its base. This apparatus was fitted in H.M.S "Dee," and afterwards in the R.M.S. "Tyne," in the Cunard Company's steamer "Persia," and in an oblong form in the "Great Eastern."

In the case of the "Great Eastern," the superheating apparatus was constructed by *Boulton & Watt*, and the oblong chambers containing the vertical tubes were placed in a casing of similar form which constituted the base of the chimney. See Fig. 4. A more simple construction was introduced by the same firm in the Holyhead steam packets. In these examples the lower part of the chimney was surrounded by a steam casing, which was divided radially by six partitions, the steam alternately ascending and descending in these until it passed over all the surface exposed to the heat from the chimney.

Messrs *R. Napier & Sons* introduced into the steamer "Oleg" superheaters, Fig. 5, consisting of horizontal steam tubes placed in an oblong casing forming the root of the funnel. The tubes were 2 inches outside diameter, 5 feet 6 inches long, and were fastened in flat stayed boxes or headers.

Messrs *Lamb & Summers* employed flat-sided flues similar to those used in their marine boiler, in place of tubes, the steam being passed inside the flue passages in the superheater instead of the reverse arrangement, which was adopted in their boiler. The alternate spaces were used for passages for the chimney gases. These were 2½ inches wide, the free spaces in the steam passages being ½ inch wide. An improved form was made in 1865.

In *Beardmore's* superheater, Fig. 6, horizontal steam tubes with flat headers were used, but this arrangement differed from the others in that it formed an integral portion of the boiler, and no stop-valves were employed. It was placed, like the others, in the uptake just below the chimney.

Still another arrangement similarly placed, but differing widely in design from those mentioned, was that by *Jaffrey*. This was made of cast iron in two different designs, one being a radial and the other a parallel arrangement of tubes and chambers, which can best be understood from the illustrations. Figs. 7 and 8.

Parson & Pilgrim's superheater, although contemporaneous with these other forms, differed from them all in having been placed in the furnaces of the marine boilers, Fig. 9. A steam pipe common to two furnaces descended from the steam space of the boiler between the furnace doors, and branched into horizontal pipes, one of which entered each furnace below the fire bars, and passed along to near the back of the grate. Two saddle-shaped pipes then rose from the horizontal pipe into the combustion space, and the steam passed through them and returned to an outgoing horizontal pipe laid at the opposite side of the ashpit from the ingoing pipe.

The arched pipes were frequently made red hot, and it is said (Trans., Inst. Mech. Eng., 1860, p. 23) that steam of 20 lbs. pressure, or 264° F. temperature, was found to have attained a temperature of from 484° to 540° F., the pressure remaining unchanged. This apparatus was first applied to a stationary boiler at Woolwich Arsenal, and afterwards to marine boilers in vessels of the Waterman's Steam Packet Company, on the Thames, and in H.M. steam tug "Bustler."

Of more recent superheaters that of *Schwœrer*, which was derived directly from that of Hirn, has had a wide application on the Continent. It consists of cast iron pipes, joined by semi-circular bends, so that the pipes are zig-zagged, and form flattened spirals. The pipes have longitudinal projections from the surface inside, similar to those of the Serve tube, but not so large, and have transverse ribs outside like those of radiator tubes. These pipes are

placed vertically in independently-fired arrangements, and horizontally in combination with boilers of various design. Fig. 10. This superheater has been applied to a water-tube boiler at the Grand Junction Water Works, Kew Bridge (see "Engineering," 20th March, 1895, p. 403), and it is also in use at the works of Messrs Fraser & Chalmers, at Erith.

A former design of the *Uhler* superheater, recently revived in Germany, has given rise to various modifications of multi-tubular superheaters, of which one has been described by Messrs Grouvelle & Arquembourg in the Genié Civil, vol. xxiv., No. 12, p. 181.

In the *Uhler*, as now made, steel is used for the header, which has two divisions, from which tubes of the "Perkins" or "Field" pattern extend. It is claimed that this method of construction prevents the tubes being overheated as the saturated steam meets the tubes at their hottest parts, and that higher temperatures and pressures can be used with this superheater, whilst the tubes remain more free from solid deposit.

The *Hering* superheater, Fig. 11, is made of tubes of small diameter of Swedish steel without welds, zig-zagged in parallel folds, the several coils passing the steam "in parallel." It has been applied to elephant boilers and to water-tube boilers. As so arranged, the hot gases can be shut off by dampers entirely from the superheater, and made to pass over the boiler surfaces in the ordinary way. Ordinarily steam temperatures of from 450° to 550° are attained, but temperatures as high as 800° F. can be used.

The *Gehre* superheater, which is shown in Fig. 12, when fitted in a boiler flue, or as separately fired, consists of horizontal cylindrical chambers of small diameter, through which small tubes for the conduct of the hot gases pass, the steam being in the space surrounding these tubes. In the case of the *Gehre* arrangement adapted to a water-tube boiler, one or two rows of water-tubes are omitted, and, by means of sleeves carried through the headers, these tubes are transformed into superheating tubes, the saturated steam entering at the front and the super-

heated steam escaping at the back. Two tiers of these tubes are employed when a high degree of superheat is wanted.

Musgrave & Dixon's superheater is shown in Fig. 13, and consists of a row or nest of U-tubes suspended from a tube plate forming the bottom of a box, and placed in the flue of a Lancashire or other boiler at the back of the furnace tubes. The box or header is divided by a vertical diaphragm so as to direct the course of the steam. By-pass and other valves are arranged, as it is not intended to pass all the steam from the boiler through the superheater. The superheater has 120 square feet of heating surface, with a boiler having 1,195 square feet.

M'Phail & Simpson's superheater was generally combined with an internal radiator or generator of radiating tubes placed in the interior of a boiler, the idea being to control the amount of superheat in the steam passing to the engines. This arrangement is shown in Fig. 13, and consists of two nests of vertical steel tubes expanded into cast steel headers. One of the top headers is connected to the anti-priming pipe in the boiler, and the corresponding bottom box is in connection with a copper pipe laid inside the boiler below the furnace flue. The other end of the radiator pipe connects to the second bottom box or header, and the top header of this nest to another horizontal pipe laid in the top of the boiler over the internal flue just under the water-line, and ending at the main steam stop-valve.

Another form of this superheater, as applied to water-tube boilers, is shown in Fig. 15, and applications of this form of superheating tubes seem also to have been made without the radiating tubes in the water space of the drum.

Sinclair's superheater is illustrated in Fig. 16. As here shown, it was installed by Professor Kennedy at the Edinburgh Electric Lighting Station, and various results of its working have been published. The superheater tubes are flanged, and bolted to cross inlet and outlet tubes, the joints being kept away from the action of the hot gases.

Holl's superheater, shown in Fig. 17, is of the U-tube design, and is said to have been fitted to boilers at Saltaire in 1866.

The *Davey-Paxman* superheater, as shown at the Glasgow Exhibition, was composed of seven elements, each consisting of one divided header, the compartments of which were connected by a series of single loop or U-shaped tubes extending horizontally into the combustion chamber. The headers were connected together by elbows in the rear, and the steam flowed seven times through the superheating chamber, commencing in the lowest rows of tubes, which are exposed to the greatest heat, and then rose to the topmost element and working downwards to the second lowest and hottest element, from which it passed to the engine. It was independently fired, the hot gas from its furnace being under control so that it could be delivered under an adjacent boiler before passing to the economiser, or sent direct to the economiser and chimney, or passed into a main flue without rising through the superheater.

The *Sugden* superheater is another modification of the U-tube form. It is illustrated in "The Engineer" of 23rd January, 1903, p. 100. Other British superheaters include that of Professor Watkinson, about which we may hope to learn some particulars from him; that of Chatwood, illustrated in "Min. Proc. Inst. C.E.," vol. cxxviii., pp. 110-111; those of Cruse*, the Stirling Co., the Babcock & Wilcox Co., and some others. Amongst those in use on the Continent are the Walther, the Steinmuller, the Reisert, the Meyer, the Buttner, the Durr, the Simonis & Lanz, the Göhrig, the Gohring, the Bohmer, and the Hildebrandt forms. Some of these are composed of straight tubes, some of zig-zagged tubes, but a large number of some form of U-tube. The last three named have various forms of coiled tube. All are illustrated in "The Mechanical Engineer" of June 8th and 22d, and July 13th, 20th, and 27th, 1901.

One form of superheater proposed by *R. Wolf* for locomotive

* "Engineering," 14th Aug., 1903, p. 216.

type of boilers is shown in Fig. 18, as applied to a semi-portable engine and boiler. Another arrangement more suitable for locomotives proper has been proposed by Mr J. Riekie. Space is not available for a description in detail of all these forms, but a few words must be devoted to the *Schmidt* arrangement before concluding this section.

This is shown in Figs. 19 and 20. In one form it consists of spirally coiled tubes, and in the independetly fired variety the tubes are horizontally coiled. They are arranged so that the saturated steam from the boiler meets the hottest gases. In the spirally coiled form, the lowest coils, composed of eight tiers containing five coils each of spirally wound 2-inch pipe, constitutes the economiser; the eight tiers of $2\frac{3}{4}$-inch pipe directly above, forms the superheater. The wet steam enters below and passes through the first four tiers, then to the eighth, and flows downwards to the fifth, from which it is withdrawn. A somewhat similar arrangement is observed in the other form.

The Use of Superheated Steam.

In the early days of the use of superheated steam it was recognized that a saving in the quantity of steam used by engines, and therefore in the fuel required to produce that steam, resulted when steam was superheated. Consequently the results were usually stated in terms of the saving in fuel realized. Such terms were, however, not very exact, because the general practice, which was one element in the comparison, had not reached a very high level of excellence, and there was not any keen analysis applied to the thermal conditions of the problem. But although the theory of the heat engine was not understood, except, perhaps, by a very few, yet it was soon recognized that the great advantage of superheated steam lay in its preventing condensation and re-evaporation in the cylinders of steam engines. This idea Professor W. C. Unwin maintained (Trans., Inst. Mech. Eng., 1896) was due to Hirn, and was not known until 1855. Mr John Penn wrote in 1859 that "if as much heat be added to the steam by superheating it before

entering the cylinder as will supply the amount of which it is robbed by the cylinder, it will remain perfect dry steam throughout the stroke and not a drop of water will be deposited." This, he believed, was the mode in which the superheating of steam acted in producing a saving of steam and consequent economy of fuel, by preventing the extensive waste of steam that ordinarily took place, and this, to him, indicated the extent to which the superheating could be carried with any great advantage. As an example he took steam of 20lbs. pressure above the atmosphere, temperature 260° F., and believed that an addition of 100° F. to the steam temperature would have the desired effect, which could be attained more perfectly by superheating the steam before its entrance to the cylinder than by a steam jacket. In his view the result aimed at could best be attained by utilizing the waste heat of the furnace gases, as this involved no expenditure of additional fuel and preserved the superheater from excessive temperatures.

Almost all the statements as to the economy of superheating, when given in terms of economy of fuel, are, however, unintelligible in the absence of information concerning the evaporative efficiency of the boiler, or comparative tests with and without superheating. The late Mr E. A. Cowper endeavoured to give a rational basis to such a measure of economy in the following remarks:—"Steam is expanded by increase of temperature at pretty nearly the same rate as air and other gases; and since air at 32° F. is doubled in volume by an increase of temperature of 480° F., steam at 20lbs. per square inch, or 260° F., will be doubled in volume by 708° F. increase of temperature (480° + 260° − 32° = 708°); and a rise of 100°, from 260° to 360° F., will consequently increase its volume $\frac{1}{7}$th, causing an equal saving in consumption of fuel when the superheating is effected by using the waste heat of the smoke box. As the specific heat of steam is only about $\frac{2}{3}$ths that of air, steam will require only $\frac{2}{3}$ths the quantity of heat to be supplied to it to produce the same rise of temperature, and, partly for this reason, steam is now used instead of air in caloric engines, since the same effect of

expansion is thereby obtained with so much less supply of heat." This is so far satisfactory; but there is no doubt that the method of thermal analysis which is now in use gives the opportunity of making a much more comprehensive estimate of the value of superheating.

Theoretical Advantages of Superheating.

The principal objects of heating steam to a temperature above the boiling point corresponding to its pressure were stated by Rankine to be threefold, all tending to increase the efficiency of the fluid and economize fuel:—

1. To raise the temperature at which the fluid receives heat, and so to increase the efficiency of the fluid without producing a dangerous pressure.
2. To diminish the density of the steam employed to overcome a given resistance, and so to lessen the back pressure.
3. To prevent the condensation of the steam during its expansion without the aid of a jacket.

In computing the expenditure of heat, the power, and the efficiency of a superheated steam engine, he assumed superheated steam to be in the condition of a perfect gas and deduced its density from its chemical composition.

Taking Regnault's values for the weights of the gases,

One cubic foot of hydrogen	=	0·005592
Half a cubic foot of oxygen	=	0·044628
One cubic foot of ideal steam, $D_{0,}$	=	0·050220

The volume of 1 lb. of steam at 32° F. and 1 atmosphere pressure is

$$v_0 = \frac{1}{D_0} = 19{\cdot}913 \text{ cubic feet, and}$$

$$p_0 v_0 = 19{\cdot}918 \times 2116{\cdot}4 = 42141 \text{ foot lbs.}$$

For 1 atmosphere pressure and 212° F.

$$v_1 = 1{\cdot}365\, v_0 = 27{\cdot}18 \text{ cubic feet};$$

$$D_1 = 0{\cdot}3679 \text{ lbs.}$$

$$p_1\, v_1 = 1{\cdot}365\, p_0\, v_0 = 57522 \text{ foot lbs.}$$

Rankine gives (in "The Steam Engine and other Prime Movers," p. 441) a table of elasticity and total heat of 1 lb. of steam gas at different temperatures, commencing with 32° F. and increasing by 18° at each step up to 572°. In calculating h, the foot lbs. of energy required to raise the temperature of 1 lb. of water from 32° F. to T, Rankine used the formula $h = 772\ (T - 32)$. (Later research, however, has tended towards increasing the value of J to 778.) Taking an ideal case to calculate what would be the probable increase of efficiency if the steam, admitted at a mean pressure (p_1) of 34 lbs. per square inch, or 4896 lbs. per square foot, and cut off at 0·2 of its final volume, were superheated so as to have temperature, T, = 428° F., instead of 258°, the temperature of saturated steam, the data were as follows:—$p_1 = 4896$; $v_1 = 15{\cdot}52$; $T_1 = 428 + 461{\cdot}2 = 889{\cdot}2$; $r = 5$; $p_3 = 493$; $v_2 = 77{\cdot}6$; $p_1\, v_1 = 75{\cdot}976$; $p_m \div p_1 = 0{\cdot}456$; $rp_m \div p_1 = 2{\cdot}28$. Professor Thurston thus expresses the work done in this case and the thermodynamic efficiency:

$$\text{Work performed} = U = p_1\, v_1 \frac{rp_m}{p_1} - p_3\, v_1 = 134986 \text{ foot lbs.};$$

the mean effective pressure:

$$p_m - p_3 = \frac{U}{r\, v_1} = 1740 \text{ foot lbs.}$$

The heat expended per lb. of steam supplied, being the difference between the total heat supplied, H_1, and the total heat of the feed-water, h_4, taken into the system per lb,

$$H_1 - h_4 = 989788 - 55612 = 934176 \text{ foot lbs.}$$

The thermodynamic efficiency:

$$E = \frac{U}{H_1 - h_4} = \frac{134986}{934176} = 0{\cdot}145.$$

With saturated steam the same mode of computation would have

yielded an efficiency of 0·128, showing a gain in favour of superheating, due to the increased temperature, of nearly 20 per cent.

Professor Thurston has also shown that if the steam at the pressures and temperatures just quoted were worked in a Carnot cycle the thermodynamic efficiency would be

$$E = \frac{889 - 609}{889} = 0{\cdot}315,$$

and with saturated steam *

$$E = \frac{719 - 609}{719} = 0{\cdot}153,$$

which shows the efficiency doubled by superheating.

Another method of computing the efficiency of a steam engine, which is termed the "thermal efficiency," as thus estimated, is that of the Committee of the Institution of Civil Engineers, appointed to report on the definition of standards of thermal efficiency for steam engines. This Committee adopted as the standard, the ratio of the heat utilized as work upon the piston to the net heat supplied to the engine, and their ideal steam engine had a thermal efficiency of 0·285, whilst that of a good example of an actual engine gave 0·15—in this case with saturated steam.

Graphic methods of representing the action and effects of superheating have been used. Mr G. A. Hutchinson (Trans., Amer. Soc. Mech. Eng., May, 1901) used the p v diagram as shown in Fig 21. He said, with reference to it, "Suppose that a given weight of saturated steam has the volume ag, and that an equal weight of superheated steam has the volume ab. If the saturated steam expands adiabatically in a non-conducting cylinder—that is, the intrinsic energy of the steam is turned into work without loss

* The temperature of the back-pressure steam being 600 deg. F. absolute, and that of saturation at boiler pressure 258 deg. F.

or gain of heat*—the exponential curve $g\ h$, $p\ v^{1\cdot13} = c$, will represent approximately the process, and the area $a\ g\ h\ i\ f$ the work done. The steam loses heat, and a portion condenses during the process, as may be seen by comparing the lines $g\ c$ and $g\ h$, $g\ c$ being the saturated steam, which follows approximately the relation $p\ v^{1\cdot0646} = c$. If the superheated steam expanded adiabatically the curve $b\ c$ would be plotted from the relation $p\ v^{1\cdot333} = c$. At c the point of saturation would be reached, and from then on condensation would ensue, and the curve $c\ d$, $p\ v^{1\cdot135} = c$, would represent the process thereafter. The work performed would be represented by the area $a\ b\ d\ e\ f$, and the gain due to superheating by the portion which is cross-hatched." His expression of the equation for superheated steam is $p\ v = 93{\cdot}5\ T - 971\ p^{\frac{1}{2}}$ where p = the absolute pressure in lbs. per square foot, v = the volume in cubic feet, and T = the absolute temperature in degrees F. Taking saturated steam at 150 lbs. boiler pressure, the temperature of which is 365·7° F., he remarks that if a pound of it be superheated to 600° F., the volume remaining constant, or about 2·756 cubic feet, "the pressure according to the above equation will become about 202 lbs., whilst one pound of saturated steam at the same temperature would probably develop a pressure exceeding 1500 lbs. per square inch. If, however, as is the case through expansion, the pressure of the superheated steam remains practically constant and the volume increases, 3·674 cubic feet will be the space occupied by one pound. With a feed-water temperature of 100° F., 1125·5 B.Th.U. must be added to a pound to evaporate it at 150 lbs. pressure. A further addition of 112·6 B.Th.U. will superheat it to 600° F. and increase the volume from 2·756 cubic feet to 3·764 cubic feet. In other words, 10 per cent. additional heat increases the volume of the steam 33⅓ per cent."

The $\theta\ \phi$ or temperature entropy diagram for 1 lb. of superheated steam, has been given by Professor W. Ripper (Min. Proc. Inst. C.E., vol. cxxviii., p. 69) and is shown in Fig. 22.

* This evidently means without external or extrinsic loss or gain of heat.

"Starting with the line a A, T_o is the absolute temperature of the cold feed to a convenient scale of temperature; T_f is the temperature of the hot feed after passing through the feed heater. The area a A B b represents the heat units taken up by the feed-water in passing through the heater. Therefore, the length $a\,b$ represents (total heat supplied during change from T_o to T_f) ÷ (mean temperature during change); or $a\,b$ might be obtained from Tables of 'Entropy.' The area b B C c represents heat units given to the feed-water after entering the boiler to raise it from temperature T_f to temperature of evaporation T_s. The area c C D d is the heat added during evaporation of 1 lb. of water at constant temperature T_s, to convert it into steam, and represents the latent heat L_s for 1 lb. of steam at absolute temperature T_s and pressure p_s. The length of the entropy line $c\,d$ is $L_s \div T_s$. The steam is now to be superheated and its temperature is raised from T_s to some temperature T_e along a constant pressure line D E. The height of T_e depends on the temperature of the steam, and is drawn to the same scale of temperature as before. The quantity of heat Q involved in this change is 0·48 ($T_e - T_s$), where 0·48 is assumed to represent the specific heat of steam at constant pressure. Therefore, the length $d\,e$ is 0·48 ($T_e - T_s$) ÷ (mean temperature between T_e and T_s). Assuming adiabatic expansion from T_e along the vertical line E e, where the vertical line cuts the dry-steam line D N, as at g, the steam ceases to be superheated, and if expanded further becomes wet steam. In the case shown in the diagram the steam is superheated when exhaust opening takes place, viz., at m. The steam follows the constant volume line through $m\,n$ to the back-pressure line $n\,p$. The "dry-steam" line D N is drawn by taking values from the tables for $L_2 \div T_2$; $L_3 \div T_3$, &c., at various pressures p_2, p_3, &c., and drawing a free curve through the points thus obtained.

"The 'absolute thermal efficiency' of an engine working under the conditions herein described, and subject to no losses whatever, is represented by the hatched area p C D E $m\,n\,p$ ÷

b B C D E *e b*" the absolute thermal efficiency being the ratio of the heat converted into useful work to the total heat supplied. The application of the temperature entropy diagram to a number of steam engine trials with superheated steam is further described in Professor Ripper's paper. His conclusion was that no important gain can be theoretically expected from superheating, the actual gain in practice being due to more or less complete removal of loss by cylinder condensation. With saturated steam no transfer of heat, however small, can take place from the steam to the metal without an accompanying deposit of water, which, during the exhaust, is evaporated at the expense of the heat in the cylinder walls, and thus the mean temperature of the cylinder walls is below that of the entering steam. Steam that is sufficiently superheated can part with the whole of its superheat without undergoing any liquefaction, and, being comparatively non-conducting, if dry at release will receive very little heat from the cylinder walls. Consequently it maintains a higher mean temperature in the cylinder walls. Professor Thurston has pointed out that the numerical expression of the amount of heat required in superheating is 0·48 B.Th.U. per lb. per degree of steam superheated, and that where cylinder or initial condensation is to be extinguished, the amount of superheating required, as a maximum, will be per unit weight

$$Q = \frac{a\,l}{0{\cdot}48}$$

where a is the fraction of the entering charge condensed by the cylinder walls, and l is the latent heat of the steam supplied. The amount actually required is always less than this on account of the steam approaching, by superheating, the condition of a gas, which, like other gases, transfers heat reluctantly.*

"Assuming, for example, that each pound of wet steam entering the engine, bringing with it 1200 thermal units from the fuel, is

* C. Bach, in "Zeitschrift des Vereines Deutscher Inginieur," 1902, p. 729, seems, however, to think that the heat value of superheated steam has not been accurately determined as yet.

subject to a loss of 20 per cent. of its latent heat by cylinder condensation, storing about 250 B.Th.U. in the metal of the engine; since the specific heat of gaseous steam is, according to Regnault, 0·4805, it is seen that the amount of superheating required in order that it may surrender this quantity of heat without condensation on admission must be approximately:—

$$\frac{250}{0{\cdot}4805} = 521° \text{ F.},$$

which is beyond the practically advisable limit as fixed by experience to date."

Although only a few years have elapsed since that opinion was published we have records of several installations in which a much higher temperature of superheat has been successfully introduced, and in particular the Schmidt apparatus seems to have carried the system to a higher point than many others. We have records of tests by Walther-Meunier & Ludwig,* by the Alsatian Association of Steam Users,† by Professor Schröter in Bavaria,‡ by M Hirsch, and by Professors Gutermuth§ and Ewing. Those of Professor Ewing are the most recent, and accounts of them have been published in "The Engineer" (9th January, 1903) and "The Mechanical Engineer (17th January, 1903), an earlier report by Professor Ewing having been printed in "The Electrical Engineer" of June 13, 1902 (pp. 837-839).

The Alsatian tests were carried out with Uhler & Schwœrer forms of superheaters and with a moderate amount of superheat. Professors Gutermuth and Ewing reported upon the Schmidt apparatus, in which superheating was carried up to 700° F.

* "Bulletin de la Soc. Indus. de Mulhouse," April, May, and Oct., 1896. "Mem. et Compt. Reced. de la Soc. des Ing. Civ.," Feb., 1893. Min. Proc. Inst. C.E., vols. cxvi, p 454; cxxvi., p. 457; cxxvii., p. 435.

† Bulletin de la Soc. Indus. de Mulhouse, April, 1893. Min. Proc. Inst. C.E., vol. cxiii., p. 428; vol. cxviii., p. 511.

‡ Zeit. des Ver. Deutscher Ingenieur, vol. xxxx., 1896, pp. 1390-1417. Min. Proc. Inst. C.E., vol. cxxviii., pp. 104—118.

§ Min. Proc. Inst. C.E., vols. cxxvii., p. 437; cxxviii., p. 118.

An account of the Schmidt apparatus was also given in two papers by Mr R. Lenke to the Inst. Mech. Eng. at the International Engineering Congress, Glasgow, 1901, and to the West of Scotland Iron and Steel Institute (Journal, March and April, 1902).

The results published in Professor Ewing's report gave rise to some controversy in "The Engineer," and some figures were given by Mr W. H. Booth and "The Engineer" to show that the Manningtree Schmidt engine did not yield so great an economy as might have been expected in comparison with a Reavall engine at Dartford and a triple-expansion engine at Middlesbro', both using saturated steam.

The Schmidt engine used 9·4, 9·0, and 9·5 lbs. of steam per I.H.P. hour, and 15·4, 15·0, and 17·2 lbs. per kilowatt hour when running at full, three-quarters, and half load respectively. Taking the most favourable load, steam consumption per kilowatt hour, 15 lbs. at 140 lbs. pressure, superheated to 700° F.

Total heat in 1 lb. steam from 32° F. to 140 lbs.

pressure	=	1192	B.Th.U.
Heat added by superheating (700 − 361) × ·48	=	162·7	,,
Total heat per lb.	=	1354·7	,,
Total heat per kilowatt hour	=	20320	,,

With the Middlesbro' engine—

Steam consumption per kilowatt hour, 19·55lbs at 150 lbs. pressure and 24in. vacuum—

Total heat of 1 lb. steam	=	1194·5	B.Th.U.
,, 19·55 lbs. ,,	=	23352	,,

"The Engineer" contended that making allowance for 4in vacuum this result would be reduced to 21483 B.Th.U.

Nevertheless the result with superheated steam is in advance of anything hitherto accomplished with steam engines, even although the combined efficiency of boiler and superheater seem to afford room for improvement.

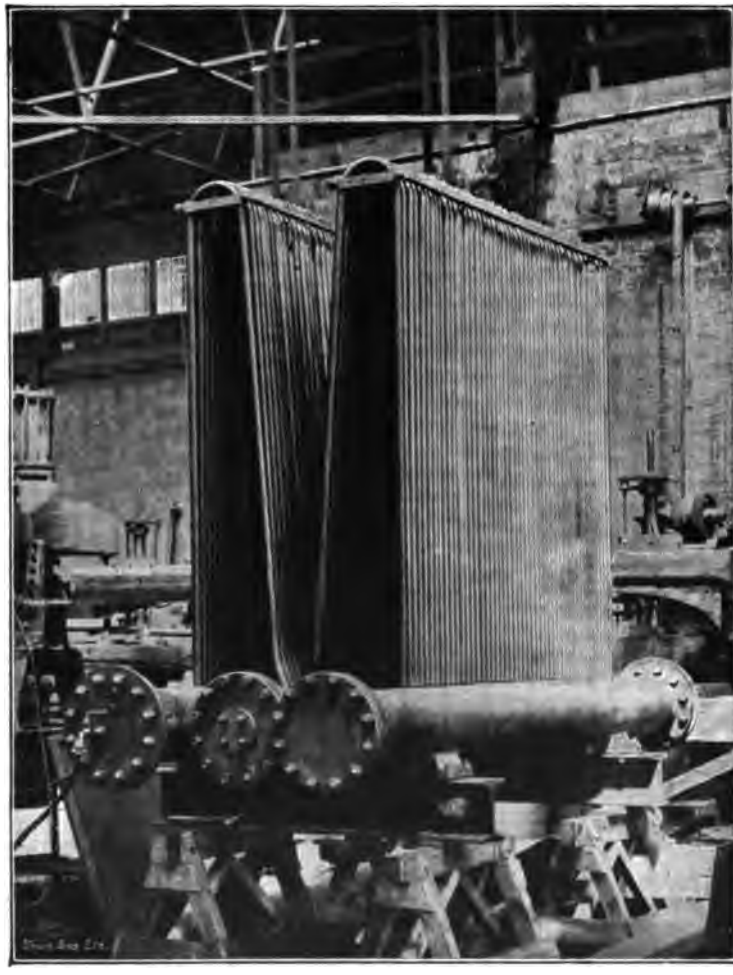

Fig. 23.

Discussion.

Prof. W. H. WATKINSON (Member) said that by superheating and the steam turbine the life of the steam engine might be prolonged in its competition with gas and oil engines. He had intended referring to the great saving by superheating due to the reduction of leakage past valves and pistons, but that matter had already been referred to by two gentlemen who had sent communications, so that he need not say more on that subject. It was found that with superheated steam the scoring of piston rods and other parts was very much less, for when saturated steam was used the water was squeezed out between the packing and the rod, which caused scoring of the rod. With superheated steam, under proper conditions, the engines worked far more smoothly and with less wear than with saturated steam. On pages 18 and 19 Mr Rowan referred to some calculations made by Professor Thurston as to the thermodynamic efficiency of superheated steam when working round the Carnot cycle. In this connection either Mr Rowan or Professor Thurston had made some mistake. He thought that Mr Rowan, in the hurry of preparing his paper, had made the mistake by overlooking the fact that the Carnot cycle could not be carried out with superheated steam. The calculations given were entirely misleading. The Carnot cycle consisted of two isothermal and two adiabatic steps. Superheating was not an isothermal process. Regarding the saving which might be effected by using superheated steam, he might be allowed to mention an instance. At the Cadzow Colliery, near Hamilton, one of his independently fired type of superheaters had been put down and had been working for some months. Prior to its installation nine boilers were required, and now only six were used. Accurate tests as to the saving in fuel had not yet been completed, but so far as could be estimated from present data the saving was 28 per cent. or thereabouts. The superheater adopted in that case was illustrated in Figs. 23 and 24. The tubes were arranged very close together, so that the gases were divided into thin sheets, and in that way, although the

Prof. W. H. Watkinson.

temperature of the gases going to the superheater might be 1400° F., the temperature of the gases leaving the superheater was only between 450° and 470° F. Mr Stothert had stated that in the case of an independently fired superheater the products must necessarily leave the superheater at a temperature higher than that of the superheated steam. In the case mentioned the temperature of the products leaving the superheater fluctuated between 450° and 470° F., and the temperature of the steam leaving the superheater at the same time was 660° F. This result was effected by the regenerative action due to the arrangement of the tubes. In the case of Lancashire, dryback, and similar boilers the superheater was fitted as shown in Figs. 25 and 26. Figs. 27 and 28 illustrated one of his superheaters fitted on board the T.S.S. "Yarmouth," belonging to the Great Eastern Railway Coy., and he drew attention to the comparatively small space it occupied.

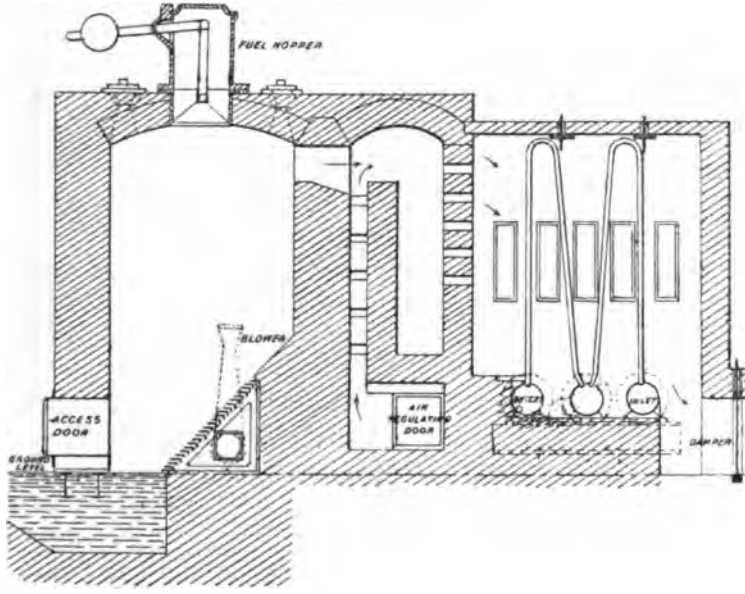

Fig. 24.

The total horse power developed was 2,000, and the coal consumption on a voyage from Dundee to Harwich was about 22 per cent.

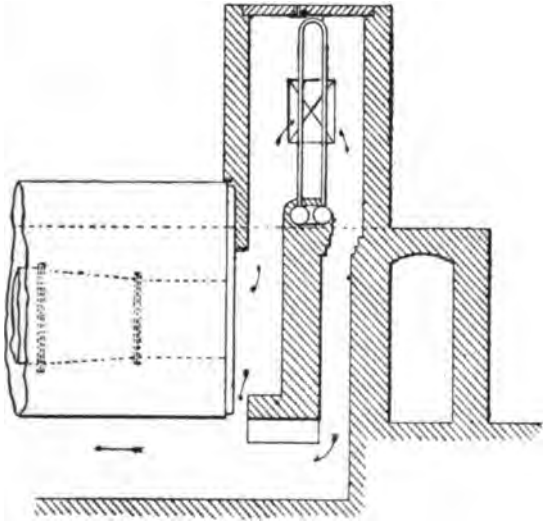

Fig. 25.

less than with a sister ship having no superheater. In cases where an increased demand for steam had arisen it was far cheaper to put

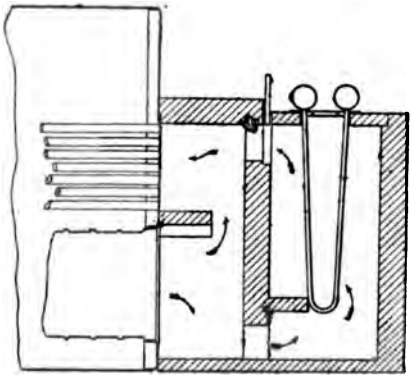

Fig. 26.

in a superheater instead of additional boilers, because not only was the boiler power very largely increased, but there was at the same

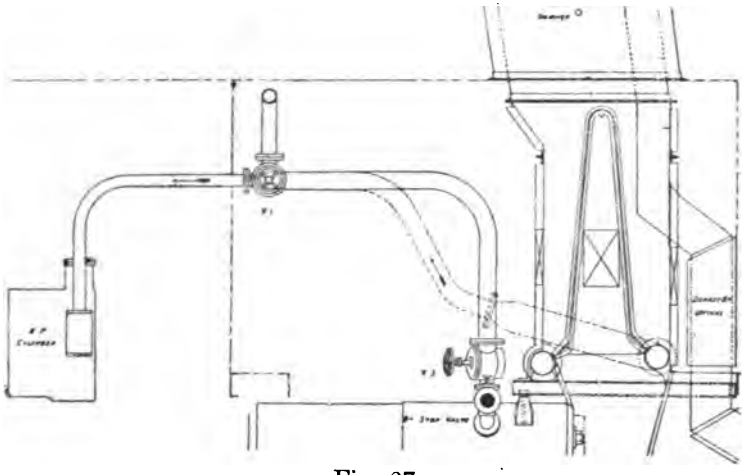

Fig. 27.

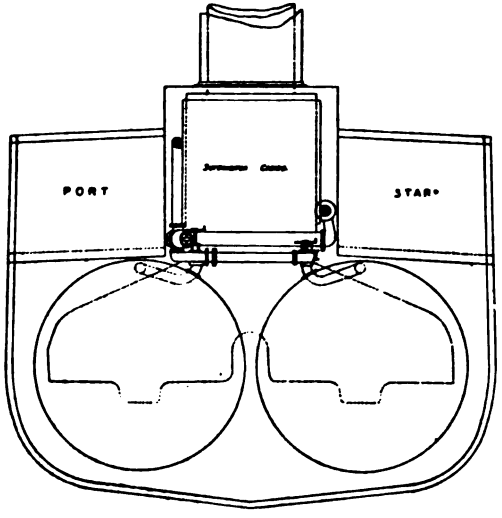

Fig. 28.

time a great saving due to the use of superheated steam. Then, again, the differences in the efficiencies of steam engines was due far more to differences in workmanship in connection with the valves and pistons than it was to any special type of valve or valve-gear. The fact that the leakages could be so enormously reduced by superheating indicated—and the indication was borne out by experience—that, by the adoption of superheating, the efficiency of comparatively old engines could be brought up very nearly to that of the efficiency of modern ones, and in many instances old engines might be saved from the scrap heap.

Mr JOHN RIEKIE (Member) thought there was no subject which could be of greater interest to a body of engineers and steam users than the one which dealt with economy in the production of steam. Various attempts had been made to improve the steaming efficiency of boilers by the use of water-tubes and other devices, which increased the heating surface, and caused rapid circulation of the water, but did not improve the quality of the steam. To get the maximum economy from steam it was important that it should be delivered dry to the cylinders. By so doing the volume of steam was not only relatively increased, but any tendency to loss due to condensation was minimised. From experiments which he had carried out, he was led to the conclusion that it was perfectly immaterial whether the boiler was of the water or fire-tube class. So long as it was large enough, and there was ample heating surface with sufficient grate area, there would be no lack of steam. Under no conditions, however, did he consider that any ordinary boiler was capable of producing steam dry enough to ensure great economy. Such being the case, no boiler could be considered efficient unless fitted with an apparatus to dry the steam. One condition by which the quality of the steam could be greatly improved was to carry a very high steam pressure in the boiler, and allow the steam to be wire-drawn down to a low pressure, but even this method could be further improved upon by the use of a superheater. Mr Rowan's paper was interesting as showing that there was really nothing new under the sun, and that the modern superheater was no improvement on those

Mr John Riekie.

used in the past. At the same time great credit was due to all who undertook the designing of superheaters with a view to recovering as much as possible any heat which would otherwise be wasted. Forced draught was responsible for great waste. He did not wish to imply that forced draught should not be used, for in many cases it might be indispensable. It was not the use but the abuse of forced draught that should be condemned. He spoke feelingly on the subject of forced draught, as for many years he had been connected with a branch of engineering where forced draught was made use of to an extent unknown in marine practice. He referred to locomotive work. The forced draught in a locomotive could be really enormous, and was so great that a waste of heat equal to about 30 per cent. of the power of the engine passed up the chimney when doing ordinary work on a level track, and was no less than 100 per cent. when doing maximum duty on grade climbing. It was this great waste of heat, coupled with an experiment he made with water-tubes in the fire-box of a locomotive boiler, which caused him to turn his attention to the necessity for superheating steam, and also induced him to design an apparatus for drying the same. He described an experiment he had made with water-tubes, and said that some four years ago he had a number of locomotives, which, although first-class engines, were poor steamers—the boilers having been made rather small for the duty required of them, so as to keep down the weight on the axle—and it occurred to him that he might increase the heating surface by the use of a few water-tubes without adding materially to the axle load. The opportunity was taken of fitting the tubes in the fire-box of one of these boilers which was laid up for repairs, the box having been taken out to have a new tube plate put in. Fig. 29 showed a section through the box, in which 19 two-inch tubes were placed. Holes $2\frac{1}{4}$ inches in diameter were drilled in the outer shell and fitted with brass wash-out plugs, so as to allow the tubes to be removed for repairs. A strengthening plate was also riveted to the inside of the shell plate as shown, and $\frac{3}{4}$-inch stays were put through each tube to stay the outer shell. When

the engine was put to work he was astonished to find that there was not the slightest improvement in the steaming power of the boiler. The engine was allowed to work for nine months, when the tubes were withdrawn and the holes plugged up. Again there

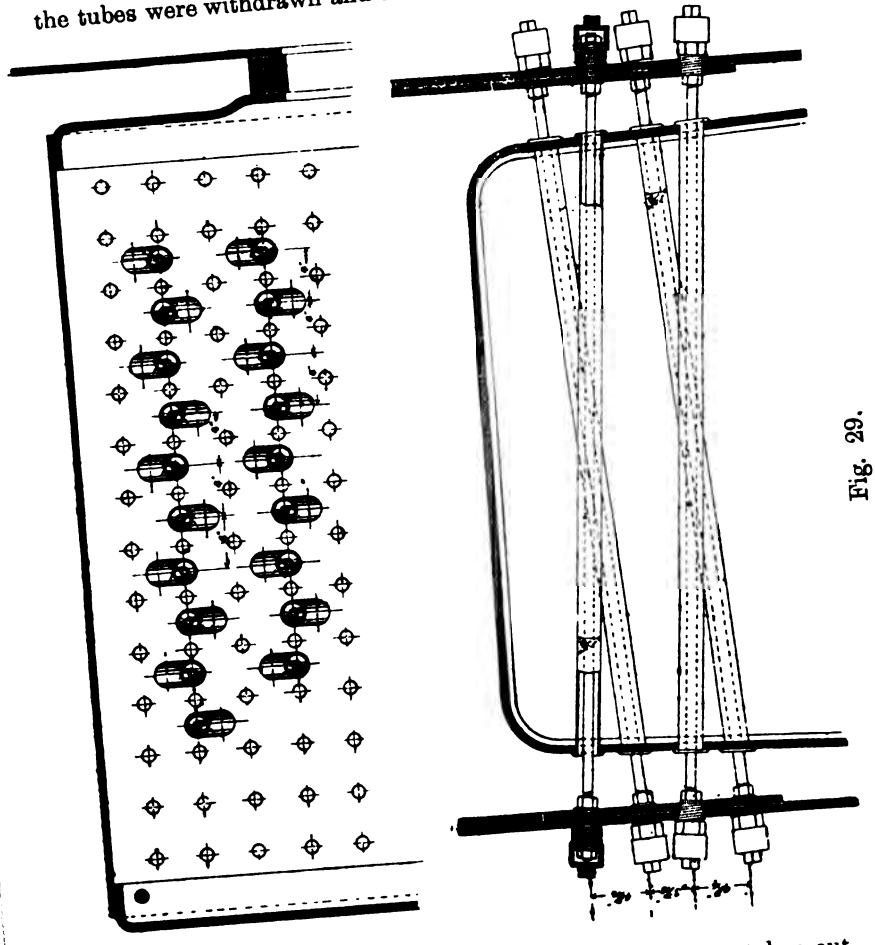

Fig. 29.

was no difference in the steaming of the engine. When taken out the tubes were found to be almost as clean as when put in, indicating that the circulation had been rapid and thorough. As to why

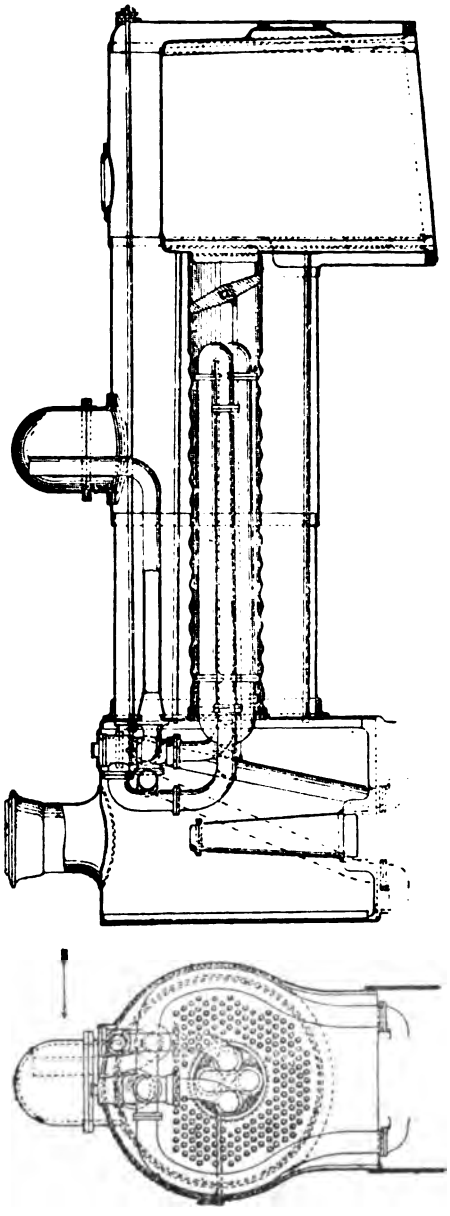

Fig. 30.

Mr John Riekie.

the addition of so much heating surface made no improvement in the steaming power of the boiler he was at a loss to explain, but he was inclined to think that the density of the steam must have been considerably increased, or, in other words, the steam must have been more highly saturated with water, the inference being that such extra heating surface was of no practical value without a superheater to dry the steam. In describing the superheater, he stated that he had tried the experiment of blocking up a considerable number of tubes, and finding that it did not impair the efficiency of the boiler he was encouraged to dispense with a certain number of tubes, so as to afford accommodation for a large corrugated flue to pass through the boiler, in which to place the superheating pipes. It would be seen from Fig. 30 that in place of the steam-pipe going direct to the steam-chest, it was made to pass twice through the flue. A damper was placed at the fire-box end of the flue, and was worked from the footplate, so that it could be closed when getting up steam, or regulated to any desired extent. The steam had to pass a valve to get into the superheater, and then pass the regulator to get to the cylinders. Unfortunately, circumstances did not allow of his carrying out this experiment, so that he was unable to state how far his expectations might have been realised. He, however, cordially invited an expression of opinion from any gentlemen present as to why he got no advantage from using water-tubes in the boiler.

Mr E. E. Doddrell (Associate) considered the illustration which Mr Rowan had given of the Schmidt superheater as somewhat ancient, and said he would like to show the modern Schmidt superheater, Fig. 31, fitted to a few up-to-date plants. He thereupon put on the screen a direct-fired Schmidt superheater without any brickwork, one with the brickwork incomplete, and another complete and under steam. He also showed a set of four Lancashire boilers fitted with flue-fired Schmidt superheaters, and drew attention to the fact that the coils of all these superheaters were composed of two distinct groups. The steam entered the top of the upper group of coils furthest from the fire, and was

Mr E. E. Doddrell.

there dried and superheated a few degrees; it then passed into the bottom of the lower group of coils nearest the fire, and took up the

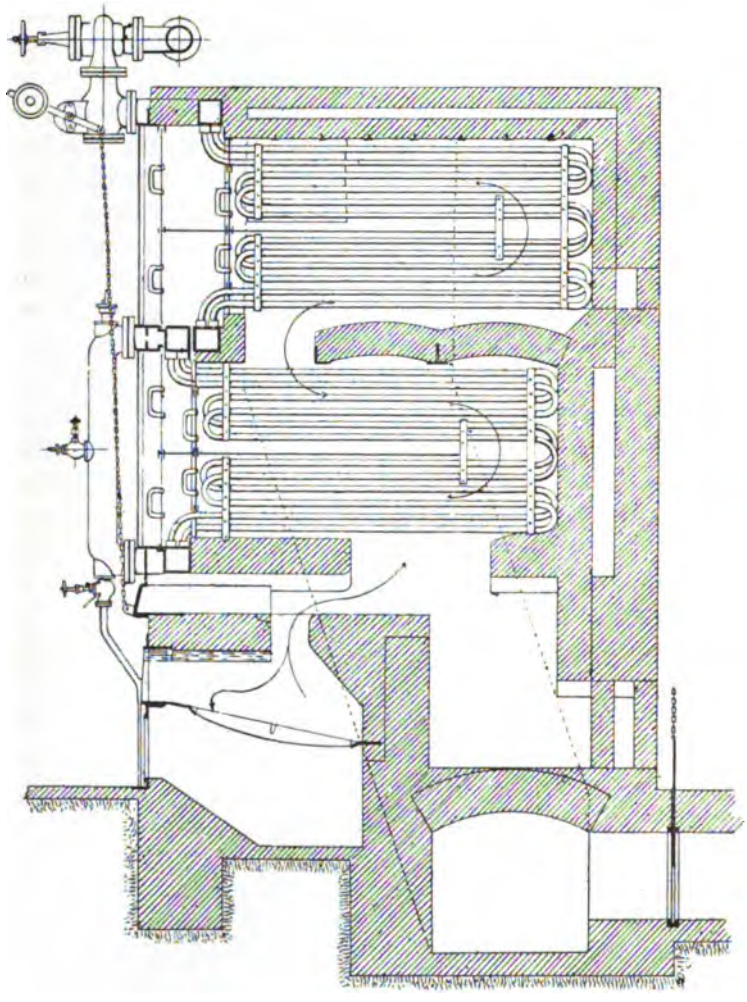

Fig. 31.

degree of superheat desired. These superheaters were completely under control and easily manipulated, as all the fireman had to do was to open or shut the dampers according to the reading of his pyrometer. He pointed out that all joints were protected from the direct heat of the flue gases, and repairs could, if necessary, be made in a very short time without stopping the steam plant; and further, that the superheater could be absolutely drained either by opening the drain cocks provided, or by having the pipes connected to suitable traps. He also showed some sections of locomotives fitted with superheaters, and of the Manningtree engine. Speaking of the economy resulting from the application of the Schmidt superheater, Mr Doddrell said that the gain might be anything from 10 to 40 per cent. in dealing with old or wasteful types of plant; but in modern plants the economies ranged from 10 to 15 per cent., which represented from 35 to 50 per cent. return on capital outlay per annum in the Glasgow district, and rather more where fuel was higher in price. According to figures given by the superintending engineer of the Canadian Pacific Railway, the economy with a simple locomotive engine fitted with a superheater, compared with an exactly similar simple engine without the superheater, was over 50 per cent., and compared with a compound engine of the same power, fully 30 per cent. In marine work, 17 per cent. economy had resulted in a round voyage to New York, and one steamer which with hard firing could only average 9½ knots was now able to steam at 10½ with easy firing. In August last, trials were conducted at the Greenbank Corn Mills, Preston, with a superheater installation. The results showed a saving of 1 cwt. of coal and 14 lbs. of water per hour, representing a monetary economy of 31s per week, or a nett saving due to the superheater, after allowing a depreciation of 10 per cent., of £50 10s per annum.

Mr Alexander Cleghorn (Member of Council) said the adoption of superheated steam was now being carefully considered by all manufacturers and engineers who necessarily had to employ the most economical means of production in these times of severe competition. Professor Watkinson had already questioned some

Mr Alexander Cleghorn.

figures said to have been given by Professor Thurston, and he would like to ask if the figures stated on page 18 could also, as there stated, be attributed to Professor Thurston, seeing that the same were to be found on page 435 of Professor Rankine's Manual of the Steam Engine. He believed that these calculations were originally made by Professor Rankine. In the choice of the extract from Professor W. Ripper's paper, describing the temperature-entropy diagram for superheated steam, he thought Mr Rowan had been unfortunate. There, for example, the entropy added to the feed-water, in passing through the heater, was defined as the "total heat supplied during the change from T_o to T_f divided by the mean temperature during change." A similar statement was made regarding the entropy due to superheating, in making the length $d\,e$, Fig. 22, equal to $0{\cdot}48\left(T_s - T_a\right)$ divided by the mean temperature between T_a and T_s. Although the use of the mean temperature as a divisor would give results not greatly in error, yet the use of the expression "mean temperature" was extremely misleading; and after the trenchant criticism by Professor Unwin, in his discussion on Professor Ripper's paper, he thought that Mr Rowan would have refrained from perpetuating the use of an expression which was mathematically erroneous. He, however, could recommend the perusal of Professor Ripper's paper to all interested in the subject, and especially his conclusion quoted by Mr Rowan, on page 22, "that no important gain can be theoretically," or rather thermodynamically, "expected from superheating," as evidenced by Fig. 22. At the time when Professor Rankine wrote, the great practical gain of annulling the cylinder-wall action was not clearly foreseen. The lessened amount of leakage past pistons and valves also increased, in a practical manner, the economy effected by the use of superheated steam, and was to be explained by the diminished amount of initial condensation.

Mr A. S. Biggart (Member of Council), remarked that as superheated steam was coming more into vogue, it was well that the subject should be fully discussed in order to make available the

Mr A. S. Biggart.

experience of those who used it. He remembered having seen a superheater removed from a steamer on the Clyde about thirty years ago, and on mentioning this matter to his friend (Mr James Rowan) that day, Mr Rowan stated that about that time he was personally engaged on the design of several superheaters, and that his father's firm, as well as others, then fitted many superheaters into steamers, all of which were in a comparatively short period discarded. The principle of superheating was not at fault; what was wrong was the type of superheater adopted. The advent of solid drawn tubes, and the better knowledge of how to superheat steam properly, had in recent years brought about success. As he happened to be one of those who had had some experience of superheating, he desired to lay a few simple facts before the meeting. Some years ago his firm laid down a large new work, and, after considering the question, decided to put down a generating station that would ultimately be a centre of power for their old as well as their new works. The boiler plant adopted was of the Babcock and Wilcox type, without superheaters. For some time after starting little trouble was experienced with the boilers or engines, but by and by, as the power demanded of the boilers became greater, trouble began to be felt. That was entirely due, so far as he could judge, to the saturated state of the steam. As the power demanded increased the trouble gradually got worse, till ultimately the engines could not be run without having all the drain cocks, at least, partially open. On asking Messrs Babcock and Wilcox to look into the matter they reported that the boilers were being overtaxed, and that additional boiler power was required. His firm admitted the boilers were overtaxed, but maintained if they gave off dry instead of saturated steam, there would be abundance for the power then required from the engines. After looking into the matter, and having decided to take further power from the station, it was deemed advisable to add another boiler plant with superheaters, thus doing away with saturated steam. This had been done, and the new plant had been working for some time. The station was now

Mr A. S. Biggart.
worked wholly with superheated steam, using only the new boiler plant which was an exact duplicate, as far as grate area and heating surface was concerned, of the old plant. All the old engines in the engine room, besides additional plant, was now being driven with superheated steam. The quantity of water evaporated in the boilers by the new plant was now only as six to nine in the old plant, in spite of the additional power used. In short, it came to this; had superheaters been added to the old plant they would not have required to add any new boiler plant at all. That was rather a remarkable experience. He did not profess to give exact details, but for practical purposes the results were convincing. Some statements appeared in the discussion, as well as in Mr Rowan's paper, dealing with the saving accruing from the use of superheated steam, showing this to vary from 10 to 40 per cent. That was a striking percentage, but when it was remembered that secondary considerations, in exceptional cases, came into play in working with superheated steam, it might be said with confidence that even a saving of 40 per cent. was not unknown—not due to superheating directly, but due largely to being able to shut drain cocks, and effect other savings in the engine and outside of it.

Mr Robert Baillie (Member) said that, having recently seen and studied some superheater practice on the Continent, he thought he might be able in some small measure to add to Mr Rowan's interesting paper by repeating a few facts regarding the use of a much higher superheat than was usual in this country. He accordingly communicated with his friend, Mr Holgar Hansen, the Engineer of the Corporation Electricity Works, Copenhagen, and that gentleman very generously responded to his request by sending the following statements which he now made. Mr Hansen had been good enough to allow him also to illustrate his remarks, and also to send the specimen of fatigued tube now lying on the lecture table. The superheaters in the West Electricity Station, Copenhagen, were originally made as illustrated in Figs. 32 and 33, with a

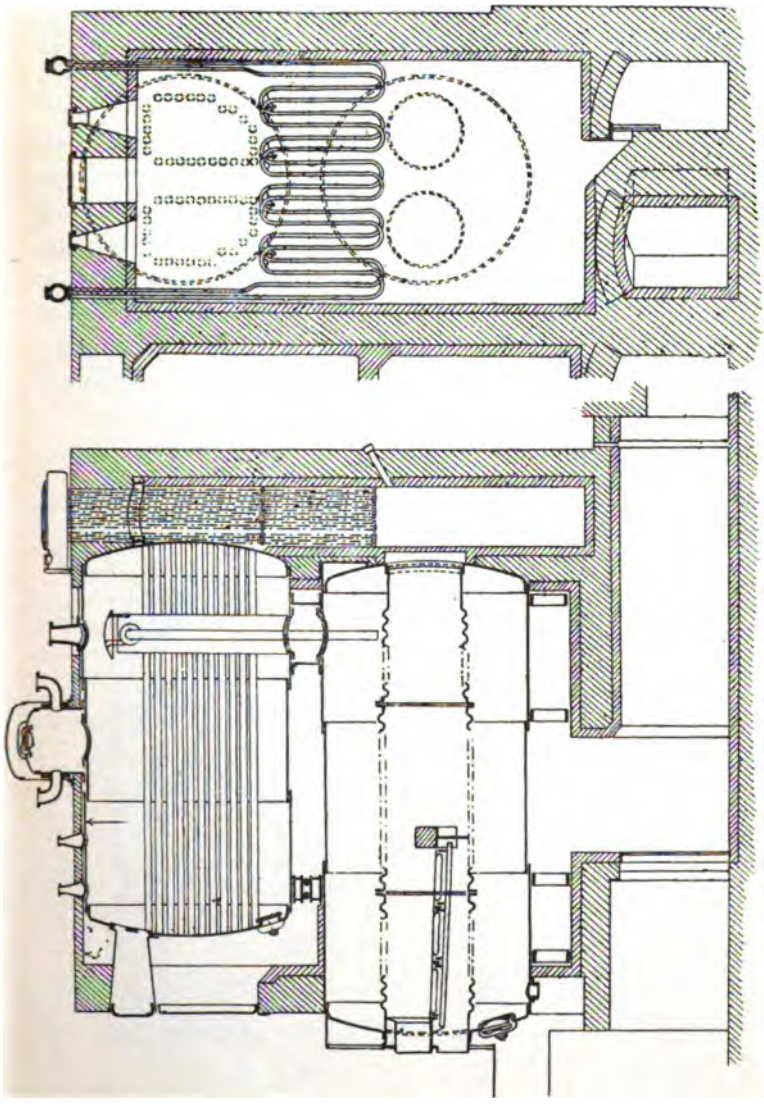

Fig. 33.

Fig. 32.

surface of about 408 square feet; but two or three days after they were installed this arrangement was found to be a complete failure. Then the superheaters were changed to the type shown in Figs. 34 and 35. In this shape the superheater from which the tube specimen was taken was used 768 hours, when the tubes of the lower row were found to be burnt, and some of them having changed their form were hanging in a bight. Another superheater of the same type had been standing about double the time mentioned before it was replaced, and had not sustained any injury. This showed that the normal use did little or no harm to the tubes, but occasionally there might be overheating of the tubes, a few hours of which was enough to throw the superheater out of action. In the summer of 1902 the superheaters shown in Figs. 34 and 35 were

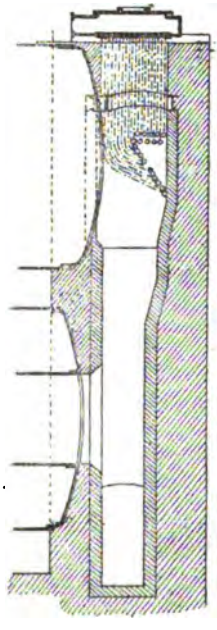

Fig. 34.

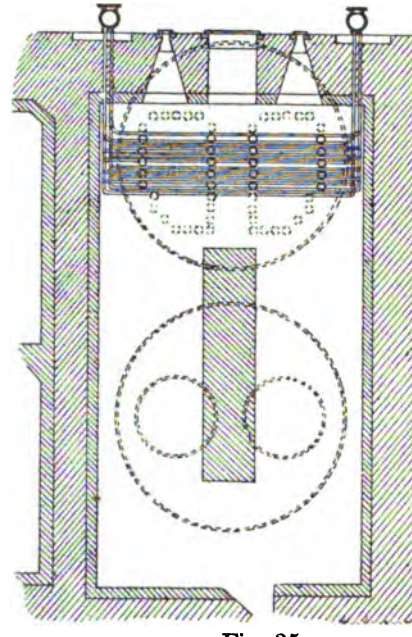

Fig. 35.

replaced by those illustrated by Figs. 36 and 37, and these had since then been in constant service, and were now in good working order. The brickwork also, it would be observed, was strengthened. The temperature of the steam was in the first instance over 752° F., in the second about 608° F., and in the third about 536° F. The pressure was 176·4 lbs. per square inch. In the Eastern Electricity Works the superheaters were constructed as shown in Fig. 38. The bye-pass dampers were built of firebrick, bound together by wrought iron rods, and stiffened by a cast iron frame. The rods, however, soon got burned, and giving way somewhat blocked the flue. Even under these circumstances there obtained a superheat of about 572° F. New dampers were then fitted, and the trials to ascertain the economical value of superheating were

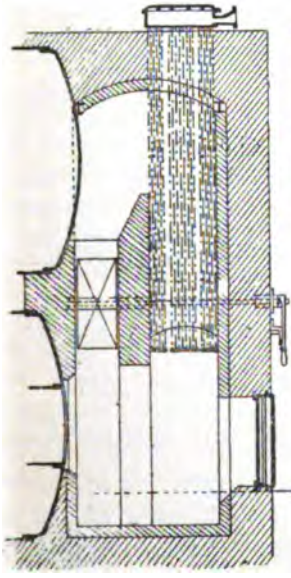

Fig. 36.

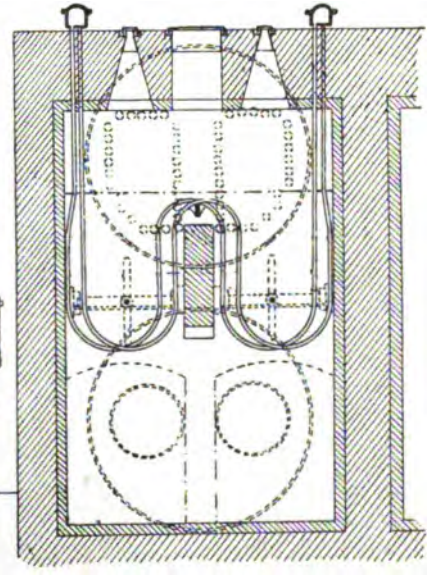

Fig. 37.

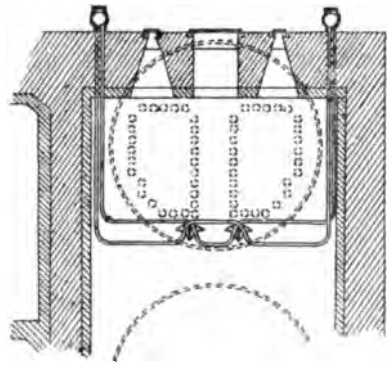

Fig 38.

carried out at the Eastern Works. The results of these trials were contained in the following tables :—

Date of trial	20/4/03	21/4/03	27/4/03
Boiler number	5	3	5
Type of boiler, all Borsig make	2 storey water tube		2 storey
Duration of trial	7 hours	6 hours	6 hours
Steam pressure at boiler	175 lbs.	168 lbs.	170 lbs.
,, engine	168 lbs.	161 lbs.	165 lbs.
Temp. of steam at superheater	604° F.	485° F.	433° F.
Temp. of steam at engine	557° F.	433° F.	417° F.
Vacuum	26″	26·18″	25·9″
Revolutions per minute	99·1	99·1	100·9
Total weight of steam evaporated in lbs.	57,438	55,206	56,847
Total weight of steam per hour in lbs.	8,205	9,201	9,474
Average I.H.P.	721	681	726
Fuel per I.H.P. lbs.	1·49	1·76	1·606
Lbs. of steam per I.H.P.	11·37	13·5	13·05

One pound of coal burnt in the boiler gave 9,900 B.Th U. to the steam up to the point of leaving the superheater. On this test

the superheater flue was somewhat blocked by fire bricks due to the collapse of the damper. In all these tests the same engine and dynamo were used. The steam pipes were somewhat short, but still the reducing influence of this was clearly shown by the following observations taken quite at random :—

Superheater temperatures, degrees F.	532, 617, 640.	575, 581, 635.	653, 656, 599.
Engine temperatures, degrees F.	539.	556.	570.
Superheater temperatures, degrees F.	593, 597, 592.	633, 653, 661.	590, 608, 635.
Engine temperatures, degrees F.	561.	559.	575.
Superheater temperatures, degrees F.	575, 530, 588.	624.	
Engine temperatures, degrees F.	565.	550.	

The boiler observations were taken every five minutes, and the engine observations every fifteen minutes. Mr Hansen closed his remarks by saying "If I were completely free to build a new station of sufficient size I should use independently fired superheaters." He was pleased to say that the Copenhagen authorities had ordered their new installation of boilers from Scotland, instead of from Germany. These boilers were to be supplied by the Stirling Boiler Company, Motherwell, and would be fitted with high temperature superheaters, Fig. 39, the inlet and outlet headers or drums of which were of sufficient size to enable a man to have access to the interior. Divisions were arranged in the drums to give a long travel and rapid circulation to the steam in the tubes. The path of the flue gases was shown by the arrow; the first bank of main tubes in the boiler intervened between the superheater tubes and the furnace. When the superheater was out of action the usual water flooding appliances were brought into operation to prevent rapid deterioration of the tubes. Temperatures up to 750° F. could be obtained with this super-

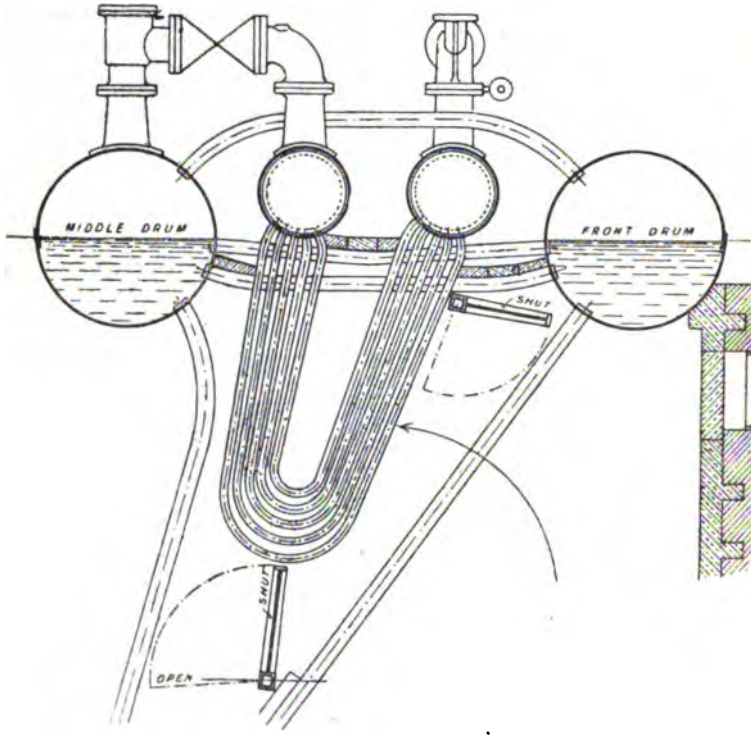

Fig. 39.

heater. With the low temperature superheater, which had straight horizontal tubes, a temperature of only about 500° F. was obtained, as it was arranged in the Stirling boiler somewhat remote from the fire, between the middle and back drums, and received the action of the furnace gases only after the latter had travelled over the first three banks of tubes.

Professor A. Jamieson (Member) said that the Members of the Institution had received from Mr Rowan the results of a very thorough research into the history of this most important subject. As Professor Watkinson and Mr Cleghorn had drawn attention to certain quotations and formulæ in Mr Rowan's paper, he (Professor Jamieson) would not further refer to these, but pass

on to a description of some data and curves which he had received since the last meeting from Mr E. A. Reynolds, M.A., of Messrs Willans & Robinson's scientific staff, Rugby; and from Mr John Belliss, of Messrs Belliss & Morcom, Birmingham. It would be seen from an examination of the three curves in Fig. 40, that the percentage gain in the feed water supplied to the boiler or steam taken from it, increased much more rapidly with the simple non-

CURVES SHOWING THE PERCENTAGE GAIN IN FEED WATER, OR STEAM USED PER I.H.P. PER HOUR DUE TO SUPERHEATING THE STEAM, WITH MESSRS WILLANS & ROBINSON'S SIMPLE, COMPOUND AND TRIPLE-EXPANSION ENGINES.

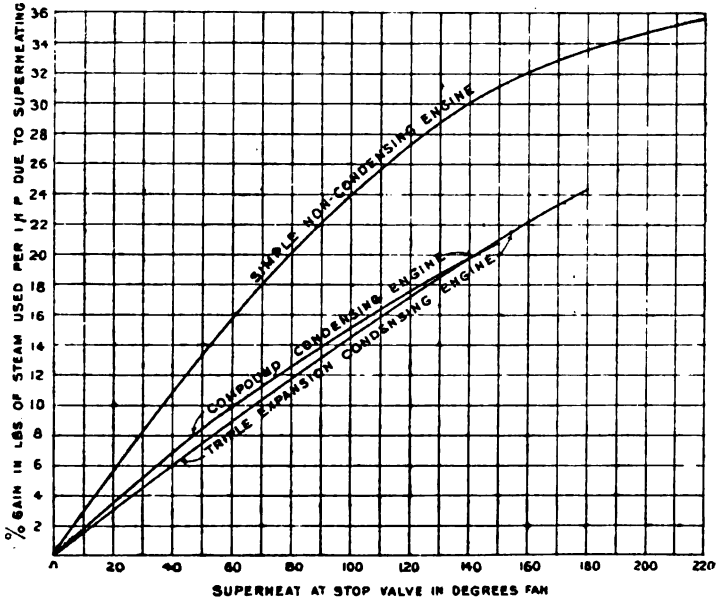

Fig. 40.

condensing engine (up to a certain degree of superheat) than with either a compound or a triple-expansion condensing engine. He

Prof. A. Jamieson.
was sorry that he had not been supplied with the data for a simple condensing engine. It was evident, however, that the curve for such an engine would lie on the diagram somewhere between that of the curves for the simple non-condensing and the compound condensing engines; because, it might be taken as a general rule, that the greater the economy which an engine showed without superheating, the less would be the percentage gain by aid of superheating. It would be observed from the inclination of the curves that a quicker increase of gain was obtained at the lower degrees of superheat than at higher temperatures. This led to the conclusion that, there was not much gain as a whole by superheating steam to a higher degree before it entered a cylinder than would just enable it to exhaust in a dry condition from that cylinder. Consequently, it would appear from this fact, and also from the other circumstances to be referred to later on, that instead of applying such a high degree of superheat as, say, 200° F., to steam before it entered the first or high-pressure cylinder of multiple-expansion engines, it would be better to simply superheat at first, by 50° to 100° F., and then to reheat the exhaust steam from each cylinder by just the required amount; except, of course, the last or low pressure exhaust, which was in connection with the condenser. From Mr Reynolds' tests it appeared that very little difference in percentage gain was obtained with triple-expansion over that of the same class and power of compound engines with the same initial steam pressures and the same superheats. The gain in each case varied, of course, with the point of cut-off, or ratio of expansion. But, taken generally and roughly, it appeared that for a fixed cut-off in all the cylinders, the consumption lines at different degrees of superheat formed a series of convergent straight lines, as shown by the diagram. Under these circumstances, he (Professor Jamieson) considered that a simple non-condensing engine using superheated steam, could be made to work as economically as a condensing one at the same piston speed and power with dry saturated steam. Also, a simple condensing engine would be

equal to a compound one, and that it was scarcely worth while to employ triple-expansion engines as far as economy, simplicity, and sweet working was concerned, when their extra complication, first cost, and upkeep were taken into consideration. It had been pointed out that results given in lbs. of water per I.H.P. per hour when using superheated steam were misleading, from the fact that such a statement did not take into account the extra heat units imparted to the steam by superheating it; and it had been suggested that a better comparison would be the number of lbs. of coal burned in the boiler furnace per I.H.P. per hour. But it was well known that coal varied much in calorific value, and boilers in efficiency. This rough and ready method might therefore be discarded as being unscientific and inaccurate. Mr. Reynolds, in his paper on "The Economy of Superheated Steam," read recently before the Rugby Engineering Society, suggested that—"The more exact method was to give the results in heat units, supplied to the water per I.H.P., adding together the units supplied by boiler and superheater." In applying this method he had assumed, that the feed water was at 200° F. This, however, was a mere arbitrary feed-water temperature, which might be specially applicable to Willans and Robinson's installations, but could not be recognised as general practice. He (Professor Jamieson), however, thought that, if the results were reckoned in B. Th. U. supplied to the feed water from 32° F. or from 212° F., a fair and uniformly applicable start could then be made from one or other of these two fixed temperatures. It would be most convenient to start from water at the higher fixed temperature of 212° F. For example, it was found that when using steam of 65 lbs. pressure per square inch by gauge, or 80 lbs. absolute in the steam chest, with a cut-off at ·3 of the stroke, a gain of 35 per cent. in weight of steam resulted by superheating it 200° F., with a consumption of only 20 lbs. of steam per I.H.P. per hour, in the case of the simple non-condensing engine, Fig. 40. Now, if 35 per cent. were the gain in this case, due to superheating, what would be the lbs. of steam per I.H.P. per hour, at the same pressure, cut-off, and

Prof. A. Jamieson.

revolutions per minute, when supplied with ordinary dry saturated steam?

$$65\% : 100\% :: 20\text{lbs.} : x.$$
$$\therefore x = 30{\cdot}8 \text{ lbs.}$$

At 80 lbs. pressure absolute, reckoned from 32° F., the number of B. Th.U. per lb. of this steam was 1177. Subtracting from this total the sensible heat units per lb. between 32° F. and 212° F. then 1177 − 180 = 997 B. Th.U. This quantity multiplied by 30·8 (the lbs. of steam required per I.H.P. per hour), gave 30,707·6 total B. Th.U. from and at water of 212° F. But the steam was superheated by 200° F. and assuming the specific heat of such steam to be 0·48; then 0·48 × 200 = 96 B. Th.U. per lb., which added to the above 997 gave 1093 B. Th.U. per lb. of superheated steam. Consequently, since 20 lbs. of such steam were used, 20 × 1093 = 21,860 B. Th.U., the total heat units in the superheated steam required per I.H.P. per hour, hence:—

$$\begin{matrix} \text{B.TH.U.} & & \text{B.TH.U.} & & & & \\ 30{,}707{\cdot}6 & : & 21{,}860 & :: & 100\,\% & : & y\,\%. \end{matrix}$$
$$\therefore y = 71{\cdot}2\,\%.$$

Or, 100% − 71·2% = 28·8%, which was the net gain when reckoned in B.Th.U. added to feed water from 212° F. due to superheating, instead of the previously measured 35 per cent gain in lbs. of steam used per I.H.P. In all cases it would be found that the difference between these two systems of estimating the gain due to superheating, increased with the superheat. When testing engines using superheated steam, it would be found interesting and instructive to plot down curves of their percentage gains by both methods. The following set of results obtained last month from a 300 B.H.P. triple-expansion condensing engine by Messrs. Belliss & Morcom, Limited, Birmingham, using different degrees of superheat up to

307° F., showed that the per centage gain or saving in lbs. of steam per I.H.P. per hour, agreed very closely with that of the triple-expansion condensing engine, by Messrs Willans and Robinson, at the same power, and with the same steam pressure as depicted upon the previous diagram. Although this remarkable economy of only 10 lbs. of steam per I.H.P. per hour was obtained with these splendid reciprocating engines, yet he felt bound to state that

DIAGRAM ILLUSTRATING RESULTS OBTAINED ON 25TH JANUARY, 1904, WITH A 300 B.H.P. BELLISS & MORCOM'S TRIPLE-EXPANSION ENGINE, USING STEAM OF 160 LBS. PRESSURE, AND A VACUUM OF 26.75 INCHES AT 475 REVOLUTIONS PER MINUTE.

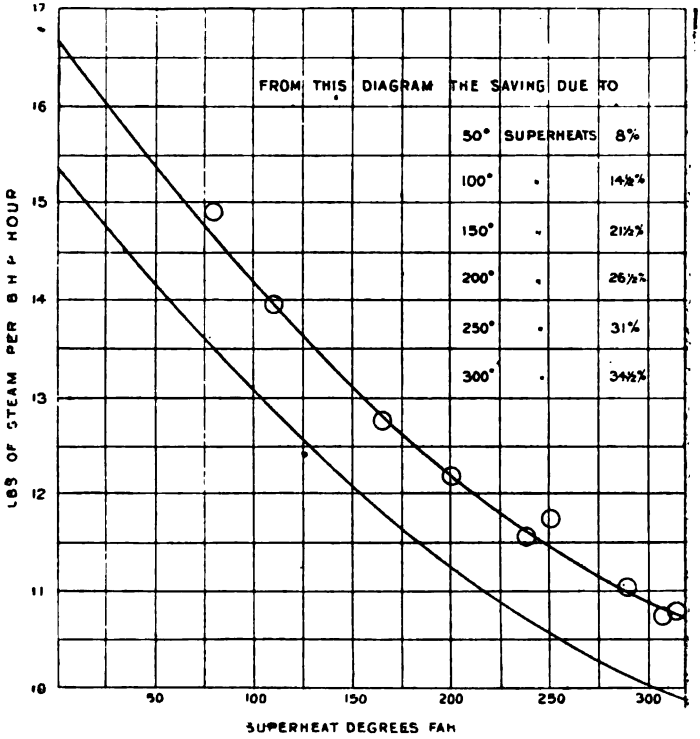

Fig. 41.

very great care and watchfulness must be observed by those who meditated using such highly superheated steam, since one or more of the following disadvantages might be encountered :—

1. Superheater tubes were liable to get warped, burned, or chemically acted upon.

2. Highly superheated steam eroded or cut into brass and gun metal. Nothing less than nickel steel would permanently stand its effects upon valves and valve seats.

3. It spoiled the working surface of the softer kinds of cast-iron cylinders. Great care should be taken in applying superheated steam to cylinders which were not made of the very best hard grey Scotch cast iron.

4. When plumbago or graphite was used as a lubricant for cylinders, it was apt to clog and jam the piston rings, &c.

5. It had been found that engines in a first-rate condition could be run with very little lubrication. When lubrication was necessary with superheated steam, then only the best kind of high flash point lubricant must be used, such as "valvoline."

6. Steam-pipe and cylinder laggings, as well as everything which came into contact with steam pipes containing very highly superheated steam, should be fire-proof, since they might be subjected to temperatures approaching 700°F.

7. The stresses arising from highly superheated steam were very great, and due allowance must, therefore, be made in the design of an engine to permit of free expansion without twisting, warping, or overstraining the parts thus affected by the extra heat. In the case of steam turbines of Parsons' type, it had been reported that the rotating turbine vanes, which worked perfectly clear of the fixed guides with ordinary saturated steam, and with low degrees of superheat, had been known to strike the latter due to heat expansion with highly superheated steam. It was also reported, that Mr Parsons objected to superheating altogether in the case of the new Transatlantic Allan liner. The high percentages of gain due to superheating steam which were obtained under the foregoing circumstances might, therefore, in some

cases, have to be considerably reduced before the net gain in £. s. d. was correctly arrived at and duly appreciated.

* FORMULA DEVISED BY PROFESSOR JAMIESON FOR ASCERTAINING THE PERCENTAGE GAIN IN B.TH.U. GIVEN TO FEED-WATER DUE TO SUPERHEATING.

Let, Hsu = Heat units per lb. of superheated steam from temp. of feed water to temp. of superheat.

,, Hsa = Heat units per lb. of saturated steam from temp. of feed water to temp. due to pressure p in lbs. per sq. inch absolute at the steam chest.

,, Wsu = Weight of superheated steam used per I.H.P. per hour at pressure p and temp. of superheat.

,, Wsa = Weight of saturated steam used per I.H.P. per hour at pressure p.

$$\text{Then \% gain in B.Th.U. due to superheat} = 100 - \left\{ \frac{100\ Hsu \,.\, Wsu}{Hsa \,.\, Wsa} \right\}$$

But, $Hsa = (H - S)$

Where, H = Total heat in B. Th. U. per lb. of feed water from 32° F., as found from "Tables on the Properties of Saturated Steam," up to and at pressure p.

And, S = Sensible heat in B.Th.U. per lb. of feed water from 32° F. to temp. of feed, t°_{f}. Or, $S = \left(t_f - 32^{\circ}\right)$

Also, $Hsu = Hsa + H\sigma\, t^{\circ}_{su}$

Where, H_{σ} = 0·48 the specific heat of steam.

And, t°_{su} = Superheat at steam chest in degrees F.

Substitute these values in the above formula :—

$$\text{Then, \% gain} = 100 - \left\{ \frac{100\left[H - \left(t^{\circ}_{f} - 32^{\circ}\right) + H_{\sigma}\, tsu\right] Wsu}{\left[H - \left(t^{\circ}_{f} - 32^{\circ}\right)\right] Wsa} \right\}$$

**Note.*—This formula was received from Professor Jamieson after the close of the discussion on Mr Rowan 's paper.—ED.

Prof. A. Jamieson.

Taking the same test and values as in the previous example for the simple non-condensing engine, where p = 80 lbs.; H = 1177 B.Th.U.; t°_{f} = 212°; H_{σ} = ·48; t°_{su} = 200°; Wsu = 20 lbs., and Wsa = 30.8 lbs.

$$\text{Then, \% gain} = 100 - \left\{\frac{100\,[1177 - (212 - 32) + \cdot 48 \times 200]\ 20}{[1177 - (212 - 32)]\,30{\cdot}8}\right\}$$

$$\text{Or, \% gain} = 100 - \left\{\frac{100\,[997 + 96]\ 20}{997 \times 30{\cdot}8}\right\} = 100 - 71{\cdot}2 = 28{\cdot}8$$

$\therefore$ gain = 28·8 %, as found before, and from the test of Messrs Willans & Robinson's simple non-condensing engine with a superheat of 200° F.

It would be seen that the only variables in the above formula were t°_{su} and Wsu. Consequently, a constant could easily be found for the other values; the various calculations could, therefore, be quickly worked out for one complete set of trials at different degrees of superheat, their results marked on squared paper, a mean curve drawn through them, and comparisons made with tests of the same or of other engines for any agreed upon temperature of the feed water.

Mr W. A. Chamen (Member of Council) exhibited a piece of superheater pipe that had been given to him by an engineer from Copenhagen. He said it would be noticed that the tube had been in use when red hot, and the outside of it had become scaled by oxidation. The inside appeared at first sight to be coated with some peculiar composition to the depth of $\frac{1}{16}$ of an inch. This proved to be blue oxide of iron formed by the union of oxygen from the steam with the highly heated inner surface of the tube, and it was interesting to note the depth to which this action had penetrated. The experience he had at starting with superheated steam, some five years ago, was that a temperature was obtained sufficient to run out the white metal from an engine governor gland, and also to set fire to some temporary timber steam pipe supports. He came to the conclusion that he was getting too much superheat, and took steps to reduce it. The engine builders considered that

the superheat should be kept within 50 degrees of the normal temperature of saturated steam at 200 lbs. pressure. This was done at some trouble and expense to the boiler makers, and now, after only three or four years had elapsed, one was told how much benefit would accrue if superheated steam at 200 degrees were used.

Correspondence.

Mr H. W. ANDREWS (Member) stated in his communication that he was sorry he could not be present to hear the discussion on Mr Rowan's paper on "Superheated Steam." There was, however, not much room for discussion, as the paper was pretty well confined to a short description of the different makes and types of superheaters, with, to conclude, some particulars of Professor Ewing's test of a plant at Manningtree. That test gave 700° F. at the cylinder, and it did not seem to show up very well when the duty from the apparatus was reduced to B.Th.U. per kilowatt, and compared with the Middlesborough engine. Possibly had the emperature been, say, 550° F. (or say 190° F. superheat) the total heat per kilowatt would have been reduced. Apart from the B.Th.U. contained in the steam, which, of course, did not take into account the means of obtaining this, it was perhaps questionable whether any independently fired apparatus could consistently burn the coal to the best advantage. He had just had to do with installing, in Fife, a "Galloway" all-steel superheater, which was fixed in the down-take behind the boiler, as shown by Mr Rowan in his illustrations. This superheater was designed to give 150° F. of superheat when the boiler was fully working. In view of the fact, for such he assumed it to be, that the greatest economy due to superheating was in the first 100° F., he ventured to think that when 150° F. could be obtained without any trouble in the above way—that was by a relatively simple design fixed in the down-take—the best practical economy was secured, and that was what they were all aiming at; or, to put it more plainly, a horse power for the least amount of

Mr H. W. Andrews.

coal, and not necessarily the smallest amount of steam or B.Th.U. per horse power.

Mr E. G. CONSTANTINE (Member) observed that the paper by Mr Rowan, coming as it did at a time when the subject of superheating was attracting more and more attention, was very opportune. The history of the development of superheating, as traced by the author, was extremely interesting, although the designs of apparatus described by no means exhausted the list, one of the most efficient and satisfactory being that of the "Field Tube" type. The two main problems of superheating were:—(*a*) Why the use of superheated steam in engines resulted in economy; and (*b*) The accurate determination of the value of the results obtained. That the use of superheated steam enabled engines to work on a lower steam consumption had been conclusively demonstrated, such economy varying according to the temperature of the steam; the distance the steam had to travel; the condition of the radiating surfaces; and the design and condition of the engine. Curiously enough, it was not invariably the most carefully designed engine, or the one in the best working order as regarded the condition of the valves and pistons, which showed the best results. This fact, with other results of observations of engines working with superheated steam, produced a strong doubt in his mind as to the correctness of the usually accepted reason for the economy experienced. It was very probable that some of the gain was due to preventing cylinder condensation, but that did not account for the extraordinary results sometimes obtained, and which, in his opinion, were mainly brought about by diminished valve and piston leakage. From experiments made by Professors Nicolson and Callender at the McGill University, Montreal, it was found that economies from 10 per cent. to 30 per cent., varying with the type of engine, were brought about by curing valve leakage. As wet steam was said to leak from forty to fifty times faster than dry steam, it naturally followed that the use of superheated steam would go far to cure the evil of leakage, resulting in greater power being developed for the steam consumed. More light was needed to

enable the true value of superheated steam to be accurately calculated. The specific heat factor for calculating the total heat of superheated steam was taken at the same figure, whether the quantity of superheat imparted was low or high. Reasons were not lacking for supposing that when the temperature had passed a certain point the specific heat was also increased. The questions were—To what temperature was the specific heat constant? and, In what ratio did the specific heat increase with the rise of temperature? It was understood that several experimenters were at work to determine these points, and until the results of their labours were forthcoming any calculations as to thermal efficiency, either of combined boilers and superheaters, or engines using superheated steam, must be regarded as approximate only, especially when dealing with high degrees of superheat. If Mr Rowan, by introducing the subject of superheated steam, stimulated research in that direction, a great benefit would be conferred on the engineering profession.

Mr J. K. STOTHERT stated that Mr Rowan had described various classes of superheater, but the Babcock & Wilcox superheater he only mentioned by name. It might interest the Members of the Institution to know that Messrs. Babcock & Wilcox manufactured several types of superheaters, chiefly the one which formed an integral part of their well-known boiler with U-tubes. They also made independent superheaters, similar to that made by Professor Watkinson, except that the tubes instead of being vertical were horizontal, and were expanded in square boxes instead of round tubes, while there were hand-hole fittings at the end of each nest of tubes by which the tubes could be cleaned and examined. It was claimed for the superheater illustrated in Fig. 42 that it formed an integral part of the boiler; it required no separate attention; and it required no ground space. It was designed to give from 100° to 120° F. of superheat, although it could be so arranged that more than that could be obtained. It was not liable through inattention, by keeping the doors open, to become a condenser. The temperature of the gases leaving the

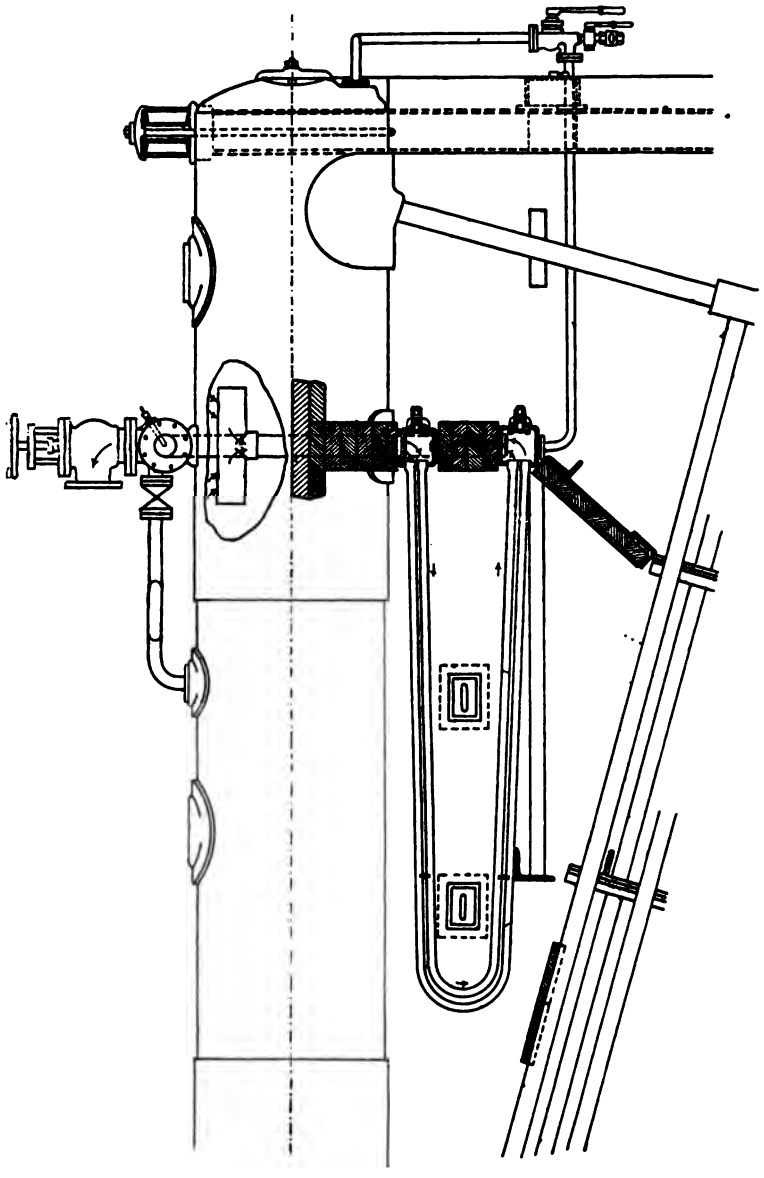

Fig. 42.

independent superheater must be higher than that of the superheated steam, and therefore the hot gases escaped to the air and were lost. In this superheater the gases generated in the furnace of the boiler passed through the first section of the tubes of the boiler and then through the superheater tubes; leaving the superheater, they passed through the second and third section of the boiler tubes, where they parted with some more of their heat and entered the chimney at a low temperature, not necessarily higher than that of the temperature of the natural steam due to the pressure at which the boiler was working. These superheaters had been in use since 1894, and there were some 5,000 now at work, and no trouble had been experienced with the tubes. That might be due, to some extent, to the device adopted for flooding the tubes when raising steam, and draining water from the tubes before admitting the steam to the engine. It was the experience of the makers that the economy of the superheater ranged from 12 to 25 per cent. in everyday working. That percentage was not quoted as the result of a special test made for the purpose, but was the result of rough commercial observations submitted to them by users of the superheaters themselves. He might instance the case of Messrs. Dewrance & Coy., of London. Previously that firm burned 13,846 lbs. of coal with natural steam, whereas with superheated steam they only burned 11,340 lbs. of coal, or a saving of 18 per cent., and the amount of work done by the boiler was rather greater when using superheated steam. The boiler was not large enough to do the work before the superheater was fitted, and after the superheater was installed it did the work quite easily.

Mr Edwin H. Judd (Member) remarked that as one of the objects of this paper was evidently to show the advantage of superheated steam over saturated, or wet steam, he thought the figures given for engines working under the latter conditions required some slight modification before a correct comparison could be made. Almost the only cases quoted for comparison of the two systems was that of the Schmidt engine at Manningtree as compared with

Mr Edwin H. Judd.
the Reavall engine at Dartford, and the Davy engine at Middlesbrough. The Schmidt was a compound, double-acting, slow-speed engine; the Reavall was a so-called compound engine of the single-acting type. In the case of the Reavall tests, the steam condensed in the "running" jacket which surrounded the steam cylinder was actually deducted from the steam used by the engine, instead of being added to it, the makers claiming that this jacket should be considered in the same way as the steam and water separator, which was usually fitted to this class of engine, the water drained from this separator on other engines being credited to the engine. He, however, did not consider this a correct basis for comparison with other engines in which the jacket steam was debited against the engine, for in the case of a short-stroke engine working condensing and doing all its expansion in one cylinder, this condensation must amount to a considerable quantity, and so it would be interesting to know if, in the tests of the Schmidt engine, the steam used in the L.P. cylinder jacket was included in the result of 9 lbs. per I.H.P. hour, or 15 lbs. per kilowatt hour. Then, again, with the Davy engine, at Middlesbrough, the steam consumption was given as 19·5 lbs. per kilowatt hour at 24 inches vacuum. The actual facts were that it was 21·47 lbs. per kilowatt hour, with a vacuum of 19½ inches, the figure of 19½ lbs. being arrived at by making a reduction of 2 per cent. for each inch of vacuum below 24 inches, this being the specified vacuum at which the engine was to work. This allowance, if only for a fraction of an inch, might be allowable, but it was not at all likely that there would be anything like a difference of 2 per cent. for each inch, for, if this was continued throughout the whole range, one would have to allow 50 per cent. more steam for an engine working non-condensing than for one working condensing at 25 inches, while the maximum saving due to working condensing was only about 25 per cent. The correspondent in the "Engineer," referred to by Mr Rowan, still further emphasised this by stating that to compare the Middlesbrough engine with the Schmidt, the former should have a further allowance of 8 per cent., because the

latter had 28 inches vacuum instead of 24 inches On that basis it was held that the Middlesbrough engine used only 21,483 B.Th.U. per kilowatt hour as against 20,320 B.Th.U. for the Schmidt engine. In a series of careful tests made by Professor Weighton, the results of which were given in a paper read before the Institution of Mechanical Engineers in July, 1902, he showed that after reaching about from 20 inches to 21 inches vacuum there was practically no saving to be effected, but rather that the steam consumption actually went up again; one reason for this peculiar fact being that the difference in temperature at the higher vacua was so large that it had a greater cooling effect on the cylinder walls. The same consulting engineer who allowed 2 per cent. for each inch defective vacuum in the Middlesbrough engine case now only allowed 1 per cent. per 1 inch, and this would appear to be much more correct, particularly in view of Professor Weighton's tests. Making an allowance, then, of 1 per cent. per inch, the Middlesbrough engine figures should be equal to 20·5 lbs, per kilowatt hour at 24 inches vacuum or 19·7 lbs. at 28 inches vacuum (to compare with the Schmidt engine). Reducing this to heat units the result would be 23,531 B.Th.U. per kilowatt hour for the Middlesbrough engine against only 20,320 for the Schmidt engine, or a saving of something like 13½ per cent. in favour of the engine with superheated steam, quite apart from the fact that the one was a triple-expansion engine while the other was only compound. Another advantage due to superheating, but one which was more practical than theoretical, and did not appear to have been mentioned in the paper, was that superheating the steam greatly reduced the leakage past valves and pistons. As evidence of this, the following figures taken from an actual test of a double-acting high speed engine would be interesting:—

EFFECT OF SUPERHEAT ON LEAKAGE PAST VALVE.—TEST MADE ON 100 B.H.P. COMPOUND, DOUBLE ACTING, HIGH SPEED ENGINE.

	Valve, Good Fit (*i.e.*, $\frac{1}{1000}$ of an Inch Slack).		$\frac{6}{1000}$ inch, Turned off, or $\frac{7}{1000}$ of an Inch Slack.	
	Wet Steam.	Dry Steam.	Wet Steam.	Dry Steam.
Steam pressure on range, lbs. per square inch, ...	98	98	108	99
Temperature of saturated steam corresponding to pressure, Fah.,	336·7°	336·7°	343°	337·4°
Temperature as noted, Fah., ...	—	339·5°	—	343·6°
	Note.—Very slight superheat.			
Steam pressure in governor valve, lbs. per square inch, ...	57	57	57	57
Vaccum, inches, ...	26·2	26·2	26·2	26·2
Revolutions per minute, ...	500	500	500	500
E.H.P., ...	69·32	60·3	60·3	60·3
Lbs. of water per hour, ...	1,532	1,549	1,724	1,591
Lbs. of water per E.H.P. hour, ...	25·39	25·6	28·5	26·3
Increase per cent.	—	—	12·2	2·7

Mr A. SCOTT YOUNGER, B.Sc. (Member), considered that Mr Rowan deserved the thanks of the Institution for bringing so prominently forward the question of superheating, which was one of great interest and importance on

account of the economy to be obtained from its adoption. The historical part of the paper showed considerable research, and it was curious to observe that all the early types of superheaters were fitted to marine boilers, especially as its use in marine work was practically discontinued soon after the principle of compounding was introduced. The reason for this seemed to have been partly due to the trouble experienced with the early superheaters, but chiefly to the fact that the use of higher pressures and the compound engine absorbed the energies of the engineers of those days. The principle of compounding had since been carried to its limit by the introduction of triple- and quadruple-expansion engines, and some engineers had even gone the length of using five cylinders, though it was doubtful if the reduced cylinder condensation compensated for the increase of friction and multiplication of parts. Engineers had accordingly to look for other sources of economy, and the advantages of superheating offered a fruitful field in this direction. These advantages were practical rather than theoretical, and consisted chiefly in reduced cylinder condensation, and greatly reduced leakage past valves and pistons. The work done by Professor Watkinson in this respect had been excellent, and the experiment of fitting one of his superheaters in the T.S.S. "Yarmouth" would be watched closely by all marine engineers. It was a matter for regret that the ratio of heating surface of the superheater to the heating surface of the boiler, along with the funnel temperatures and amount of superheat, were not given, though doubtless this information would be obtained in due course. The difficulty of making a reliable superheater was very great. It was partly constructional, but the chief difficulty was to control the temperature and prevent the tubes from being overheated or cooled below the temperature of the steam. In fact, this question of control of temperature was at the root of the problem. If a thoroughly reliable superheater could be designed which did not get out of order, nor cost much for repairs and upkeep, then shipowners would gladly welcome an apparatus which could offer them such a substantial saving in coal consumption as 15 or 20 per cent.

Mr W. S. Hide.

Mr W. S. Hide (Member) stated that as he had fitted several steamers under his charge with superheaters, perhaps a few details might be of interest. The first steamer so fitted was the "Claro," of 5350 tons displacement, and from 9 to 9½ knots speed, and her first voyage was made in November, 1900. That vessel was fitted with forced draught, a superheater in the funnel, and an air heater. The funnel gases were discharged at a temperature of about 420° F., the temperature of the steam being from 490° to 520° F. at the engine stop-valve, the temperature depending to some extent on the quality of the coal. The machinery had run, with the exception of some few initial troubles, without any bother whatever. The troubles at the commencement were due entirely to ignorance of the requirements imposed by the dryness of the steam at the above temperature; but having overcome these, no more trouble had been experienced than with ordinary machinery. The steam pressure was nominally 200 lbs. per square inch, the engineer usually working with about 195 lbs. on the boiler and 190 lbs. on the engine, the superheat being thus about 120° F. average in the H.P. cylinder. The vessel having given very satisfactory results, it was decided to fit a superheater in the "Colorado," a vessel of 8400 tons displacement and 11½ knots speed, employed in the Atlantic trade. This was done in 1902, and the vessel had been running with the superheater since March of that year. The boilers were worked with natural draught, and a temperature of 500° F. at the engine stop-valve was attained, the steam pressure being 160 lbs. per square inch. He enclosed cards, Figs. 43 and 44, showing records over 24 hours of the recording thermometer fixed for a voyage to the engine stop-valve, and also of the recording pressure-gauge, showing how steady both the steam and the temperature were kept in practical working. The fires were cleaned in the usual course. The "Aleppo," a vessel engaged in the Indian trade, of 8600 tons displacement, and 9 knots speed, was next fitted, giving similar results to the above, the boilers being worked with natural draught. The "Martello," a vessel similar to the "Colorado," fitted with water-tube boilers of the Babcock & Wilcox type, under natural draught,

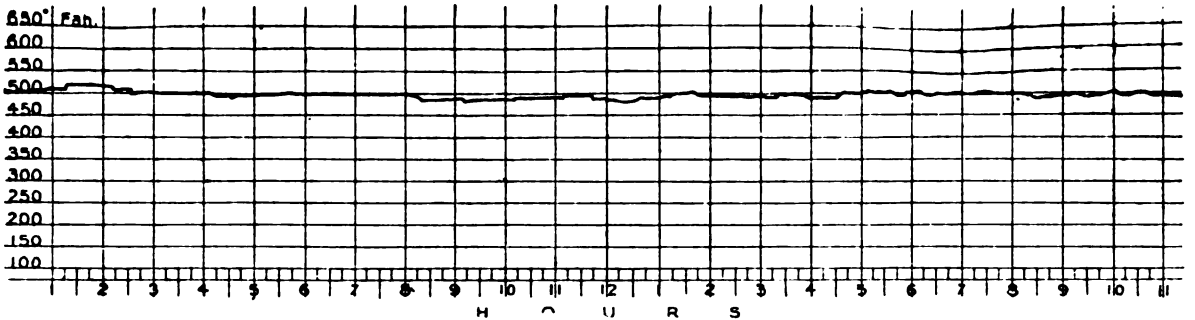
650° Fah.
600
550
500
450
400
350
300
250
200
150
100
HOURS

Fig 43.

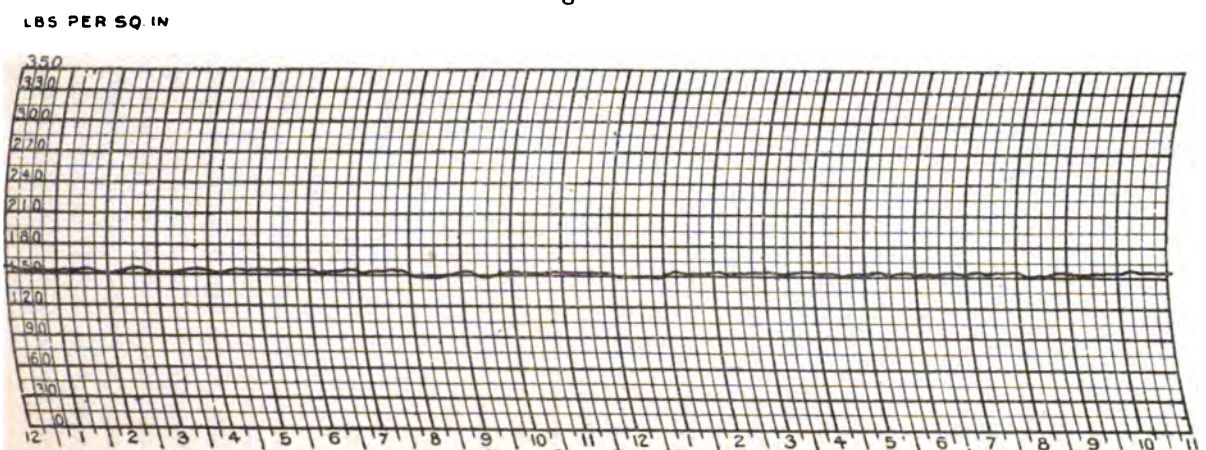
LBS PER SQ IN
350
330
300
270
240
210
180
150
120
90
60
30
0
HOURS

Fig. 44.

Mr W. S. Hide.

had also been fitted with a superheater in the funnel, and had just completed her first voyage since being fitted, with results practically equal to those of the "Colorado." The steam pressure was 210 lbs. The "Idaho," a new vessel of 11,100 tons displacement and 11½ knots speed, had just been completed and was on her first voyage. The engines were of the quadruple-expansion type, working at a pressure of 215 lbs. per square inch; the boilers had forced draught and were fitted with a superheater and an air heater. The engineer reported from Boston very satisfactory results, the steam temperature at the engine stop-valve being from 510° to 520° F., and the funnel temperature from 350° to 360° F., while the consumption of coal was also most satisfactory. There had been no deterioration of the superheater tubes whatever, observed in the "Claro," although she had now been running for upwards of three years. It was contemplated to alter more of the ships under his charge as opportunity offered, the results obtained in others fitted with superheaters having been so satisfactory. He purposely gave no details of the coal consumption per I.H.P. as the vessels under his charge appeared extraordinarily wasteful compared not only with published accounts, but also with statements he had heard in connection with other ships, viz., consumptions as low as 1¼ lbs per I.H.P. Seeing that their vessels included nearly all the most eminent firms of engineers on the N.E. Coast as builders of the propelling machinery, he could only come to the conclusion that as the coal could not very well deteriorate on being put on board their ships, nor the water be more difficult to evaporate in their boilers, their vessels must be very fortunate in requiring so much less H.P. to drive them, and that the economy in power fully compensated for the apparent extravagance of the machinery. In the working of their vessels the consumption per day, or per voyage, was found to compare very favourably with that of other similar ships. From careful experiments at sea with measuring tanks, he found that very few bunker coals, as usually supplied on the N.E. Coast to cargo ships, would evaporate more than from 7½ to 8½ lbs. of water from and at 212° F., and he thought there were very few of the

Mr W. S. Hide.

ordinary type of triple-expansion engines as usually fitted, having much larger cylinders than were necessary for the economical production of the requisite power, using less than from 15½ to 16 lbs. of water per I.H.P. per hour, including, of course, auxiliaries, leaks from glands, etc., and the steering engine. He would leave those interested to calculate the coal per I.H.P. from these figures, as he had rather digressed from superheating. As to the economy of superheating, a saving of from 14 per cent. to 17 per cent. could be safely reckoned on, depending to a large extent on the conditions and on the type of machinery (he referred to triple- and quadruple-expansion engines only, as he had had no experience of superheat with other types), but more than that he could not estimate having gained by superheating. Speaking approximately, he found that it took about from 70° to 80° F. of superheat to get the steam dry at the H.P. exhaust, and any superheat above that figure was available for the next cylinder. The difference in the running of the engines with superheated and saturated steam was very marked; directly the former was turned on all leakages of water at the glands were stopped, and the engine ran quite dry. The oil used for lubrication was a specially made pure hydro-carbon oil, having a flash point of about 700° F., and it had given most satisfactory results; the amount used in an engine of about 1800 I.H.P. being about two quarts per 24 hours, including that for swabbing all rods. He had been much interested in Professor Watkinson's remarks *re* the S.S. "Yarmouth," and should be glad if he could give the temperature of the steam at the engine stop-valve and the steam pressure. The reason he asked was that the superheating surface appeared to be very limited for 2000 I.H.P., and if the tubes were so close together as described, he thought, judging from his experience, that they would soon soot up. He presumed, from the ownership, that the vessel was on a trade requiring only a few hours' run, and was supplied with Welsh coal, and if so, there would perhaps hardly be time for much soot to deposit, but with vessels running on long trades with poor coal, he was afraid that the draught would very soon be entirely stopped. A more scientific

Mr W. S. Hide.

and accurate statement of economy might have been expected from anyone of Professor Watkinson's reputation, than when he stated that the "Yarmouth" showed 22 per cent. economy as compared with a sister ship in a run from Dundee to Harwich. To those familiar with ships the fallacy of such a comparison was apparent, and they would not be misled; but there were others who might be, and he would advise those not to base any calculations on obtaining such an economy without a more detailed account of experiments with and without superheat on the same vessel, all other conditions being the same, more especially the quality of the coal and the firemen. Perhaps Professor Watkinson could supply these figures. If Mr Doddrell would give some few details of the two vessels he mentioned, it would no doubt be of interest to compare them with those he had given particulars of. In conclusion, he might say that his experience taught him that triple- and quadruple-expansion marine engines could be safely worked without trouble when using superheated steam up to 520° F.; that a considerable economy was attained, and that the installation paid on vessels making voyages occupying any considerable time, or running any considerable distance. He also thought it would be worth while for the Admiralty to consider the use of superheated steam when running at the low powers usually required at cruising speeds in battleships and cruisers, as he felt certain the economy would be quite worth the small expenditure involved and the space occupied.

Mr H. Cruse (Manchester) observed that this phase of steam engineering, although it had been the subject of experiment and discussion for upwards of a century and a half, was still indifferently followed by the average engineer. From the historical point of view, he would suggest that Joseph Hately was one of the first in this country to advocate the cause of superheating. It was believed that he had been experimenting upon superheated steam prior to 1780; certainly he patented in 1786 an improved boiler, and claimed great economy from "surcharging" or "rarefying" the steam. Concerning the use of superheated steam, and the higher efficiency obtained from it in the cylinder, it was now

becoming generally recognised that the chief advantage, if not the whole, of superheating was derived from the following effects, obtained by and in the process of superheating:—

1. The "wet" steam from the boiler was thoroughly dried; it was fully saturated with heat and subsequently superheated.
2. Condensation between boiler and engine was eliminated.
3. When sufficient superheat had been added, the steam was carried at full saturation to cut-off in the cylinder.

During these three periods the superheat would have performed its natural functions of diminishing the rate of heat radiation in the pipes; of sacrificing itself, instead of the latent heat in the steam, to give out whatever heat might pass in such radiation; and of yielding itself to reheating and drying the valves, ports, and cylinder metals, etc., until by the time cut-off had been reached the superheat would have vanished and left the steam at its fullest power, saturated according to the pressure and in corresponding volume. Incidentally, superheat also reduced leakage in the reciprocating engine. Loss by leakage appeared to increase in ratio with the wetness fraction of the steam. Might not both valve and cylinder leakage be attributed to purely mechanical action? Might it not be that in both cases it arose from creeping and over-carriage by the slide-valve and piston, of the film of water on which they both ride, and which was deposited by condensation and continuously replenished? He, therefore, suggested that the thermodynamic equation should not enter into the consideration of superheat. The functions stated above would seem to be the only really valuable ones which it performed. It did not add to the intrinsic power of the steam; on the contrary, the steam was expanded by it and contained less heat in a given volume. In the cylinder the higher temperature limit of the range should be taken as the temperature of the saturated steam and not of the superheat; the power exerted behind the piston during admission was that of displacement by the steam forming in the boiler, and the

Mr H. Cruse.

work effected during expansion was effective from the pressure and volume of steam at cut-off. It might be advanced that superheating could be advantageously carried through expansion. He doubted whether under actual working conditions this could be done on a large scale, and, if possible, he questioned the advantage to be gained from doing it. Certainly, some engineers had remarked that the efficiency curve ceased to all intents and purposes to rise after a temperature of superheat of 250° F. had been reached in steam supplied directly to the cylinder, *i.e.*, working without re-heating arrangements. Could the increase in volume or expansion by superheating be considered an advantage? Was it not rather a necessary outcome of the increase in temperature without rise in pressure? If the superheat did not disappear by reason of the special functions performed, and with the superheat the excess volume: Would not the size of the cylinder require to be increased to effect a given work? He ventured to think Fig. 45 supplied an answer to these queries. It should always be remembered that "heat" was the "power-giver," and steam merely the medium of transmission from the furnace to the motor. Concerning the specific heat of superheat, the value generally adopted no longer stood unquestioned for the higher reaches of temperature. Between 150° F. and 300° F. of superheat, with steam at 180 lbs. working pressure, the specific heat should be placed somewhere near, if not above, 0·550. If he remembered rightly Regnault fixed this specific heat at 0·4805 for saturated steam and steam superheated to low temperatures only; he also found that not until he had added some 18° F. of superheat had he finally overcome the moisture in suspension. Berthelot, on the other hand, stated that the specific heat of the gases rose with the temperature. Treating superheated steam in the higher temperatures as a gas or compound of gases, it would be interesting if scientists worked out the grades of specific heats, say to 500° F. of superheat.

P V Diagram showing:—

1st. For saturated steam at 150 lbs. working pressure.

2nd. For steam at same pressure, superheated 300° F, the points at which cut-off would be necessary to allow admission of that volume of steam in each state to supply, in both cases, an equal value of heat to the engine cylinder—assuming, in both cases, no heat-loss during admission.

Cylinder—Diameter, 24 inches.
Net length of stroke, 4 feet.
Clearances neglected.

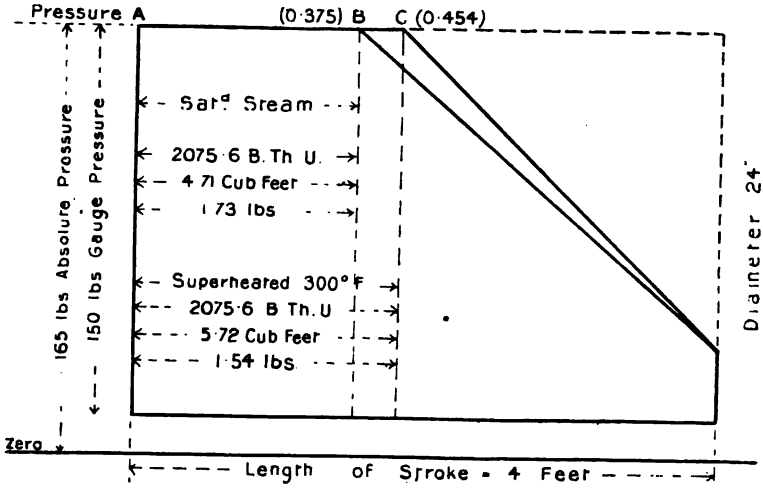

Fig. 45.

Steam—1st, 150 lbs. boiler pressure (165 lbs. absolute) = 366° F.
,, 2nd, 150 ,, ,, ,, superheated 300° F. = 666° F.
,, One cubic foot, saturated = 0·369 lb. Heat value = 440·4 B.Th.U.
,, One cubic foot, superheated = 0·268 lb. Heat value 363·2 B.Th.U.

(Assuming mean specific heat for this range of superheat to be = 0·525.)

,, Heat value admitted = 2075·6 B.Th.U.

Mr H. Cruse.

Steam—Saturated steam admitted = 4·713 cubic feet.

,, Superheated ,, ,, = 5.72 ,, ,,

Admission—A B, saturated, $\frac{4{\cdot}713 \text{ c.f.}}{4 \text{ ft.} + 24 \text{ in. diam.}}$ = cut-off at 0·375 of stroke.

,, A C, superheated, $\frac{5{\cdot}72 \text{ c.f.}}{4 \text{ ft.} + 24 \text{ in. diam.}}$ = cut-off at 0·454 of stroke.

Steam—Cubic feet per lb. weight, saturated = 2·72 = 1·733 lb. supplied.

,, Cubic feet per lb. weight, superheated = 3·72 = 1·538 lb. supplied.

The outstanding feature of the Cruse system of superheating, as illustrated in Figs. 46, 47, 48, and 49, was the method devised for

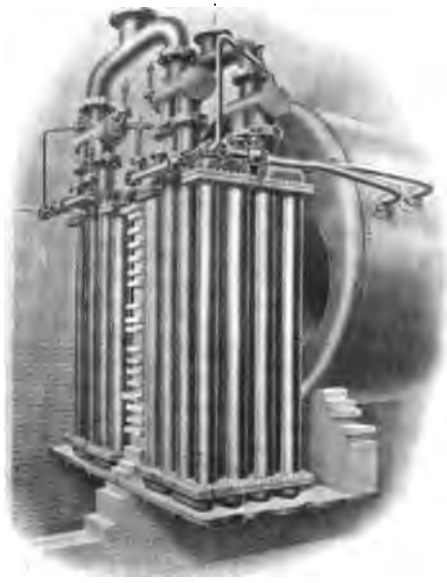

Fig. 46.—Thirty-two Pipe Superheater.

controlling the temperature of the superheat. The same device also served to preserve the tubes from being overheated at critical periods, say, when the volume of steam passing through them was greatly reduced, or when steam was being raised after lighting up. The controlling element consisted of a stream of water circulating

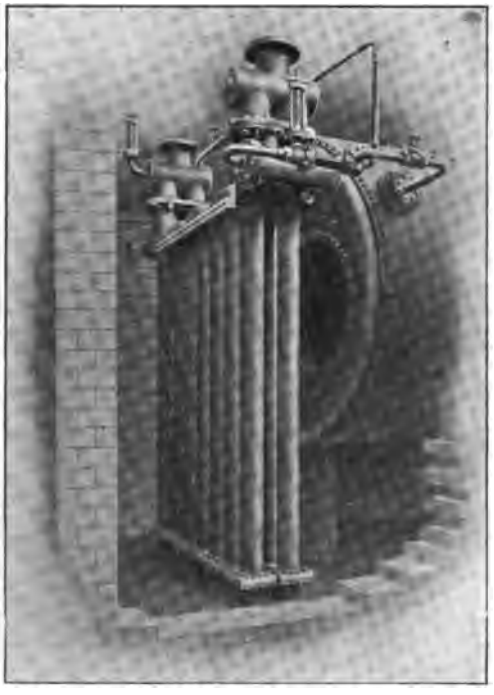

Fig. 47.—Sixteen Pipe Superheater.

from one end to the other of the superheater through copper pipes inside the steel superheater tubes. As would be seen from the illustrations, the weldless steel superheater tubes were of large bore, 6 inches in diameter; they were assembled to form semi-independent elements, each element containing from 6 to 16 pipes, and the number of elements would vary according to the importance of the apparatus. The elements were built to form spirals,

and this gave to the steam a fair length of travel in the superheater. The internal water or controlling pipes were of solid drawn copper, and followed the form and course of the steam superheating system. In the flue-fired superheater, as constructed to operate with the Lancashire boiler, the steam entered the super-

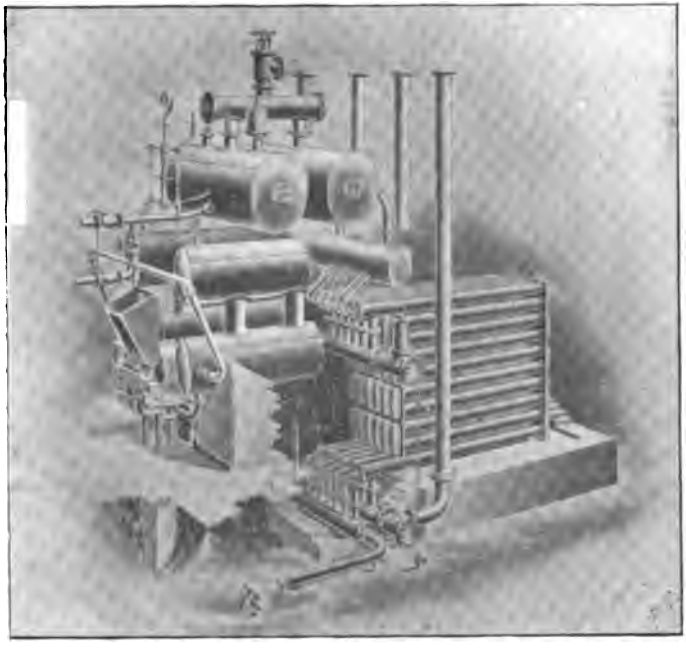

Fig. 48.—Superheater combined with Feed-Water Heater.

heater at the back and travelled zig-zag, in counter current to the heating gases, to the front. The controlling water travelled concurrently with the steam from back to front, and was taken *firstly*, from the boiler water space; *secondly*, from the economizers; *thirdly*, from the hotwell or cold main; and after travelling the various elements of the apparatus, was collected into one stream, and entered, or re-entered, the water space of the boiler, always below

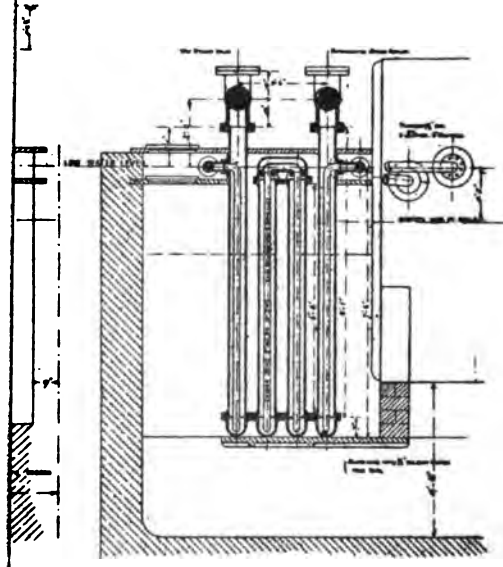

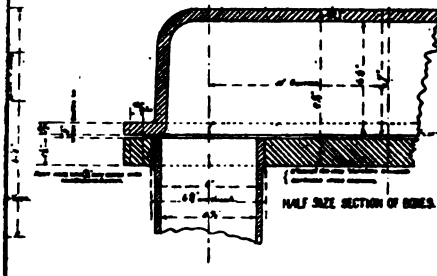
HALF SIZE SECTION OF BOXES.

low water level. The factors determining the use and proportion of any one or of all these different waters were the heaviness of the firing, the weight of steam to be passed, and especially the maximum temperature of superheat required to be added to the steam. Where high temperatures were wanted the circulating water taken from and returned to the water space of the boiler was used alone, and the flow was regulated or governed by a steam jet connected to the superheated steam collector. The steam jet was initially set as might be required to give such flow of water as would allow of a given average temperature of superheat, after which the governing effect became automatic, balancing the water flow with the increase and fall of velocity and kinetic energy of the superheated steam. In the independently-fired apparatus the superheater proper was built on lines similar to the flue-fired type, with this essential difference, that the pipes were placed horizontally, and the steam and water travelled from the collectors and distributers, at the bottom, to the collector and drum at the top of the apparatus, in counter current to the heating gases. The controlling medium in this kind of apparatus was the feed-water, primarily that from the economizers, which, intercepted in its travel to the boilers, was passed through the water drums at the side, on top and at the back of the furnace, as also through the internal pipes of the superheater, and was therein re-heated from the temperature at which it was delivered from the economizers to that of the pressure of the steam in the boilers. Further circulation was obtained by independent downcomer pipes, which carried water from the top storage drums, or last link of the reheating chain, to the bottom receiver drums. This flow was regulated by steam jets. A third, and perhaps the most powerful, element of control consisted in auxiliary feed pipes to the bottom water collector of the superheater, and these might be connected to the economizers, to the hotwell, and to the cold mains. It would be readily seen that the quicker the flow of water through the pipes and the lower its initial temperature, the greater would be the reducing effect upon the temperature of the super-

Mr H. Cruse.

heated steam. The elements of control described there might be operated in parallel with regulation of draught and of firing. The temperature of the gases from the superheater furnaces might be placed at about 2,800° F.—too high for safe application to superheater tubes. In most superheaters the necessary reduction of gas temperature was obtained by an elaborate system of baffling, and by extensive air dilution. This was wasteful, and as a consequence the coal efficiency of the superheater was brought down to a low percentage. In the Cruse superheater the excess heat in the gases was absorbed by the water system, and usefully employed in reheating the feed-water, and the general coal efficiency of the apparatus was maintained at a high standard. This apparatus was especially designed for use with batteries of water-tube boilers, and to them it proved not merely a steam superheater but also a useful evaporative auxiliary and standby, ever ready to meet overload with an ample supply of feed-water heated to the steam temperature. The water drums had a containing capacity equal to, approximately, one hour's feed for the battery of boilers with which the superheater operated.

Herr Hans Reisert (Cologne) considered that some account of the superheater of Szamatolski was necessary to complete Mr Rowan's paper. This superheater consisted primarily of two chief parts, a system of U-shaped tubes and a wrought iron steam chest, into which all the superheating tubes opened, as illustrated in Fig, 50. The steam issuing from the boiler entered through the

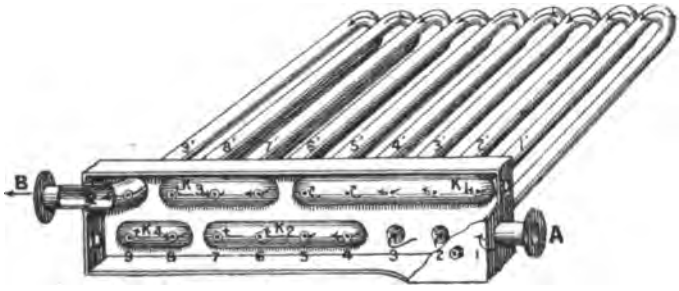

Fig. 50.

pipe A into the steam chest, D. It then flowed through the U-shaped tubes, 1, 2, and 3, and was, at their outlets, 1^1, 2^1, 3^1 guided through the cap K_1 into tubes 4 and 5, from which it issued into the cap K_2, and entered tubes 6 and 7, and from thence through cap K_3 into tube 8, whence again it issued into cap K_4, and entered tube 9, from which it was conveyed in a superheated state through the transmission cap R to the outlet pipe B, and onward to the place of consumption. The caps were inside the steam chest, and were therefore under working pressure on all sides, so that they had consequently no pressure to resist. There was, therefore, the special advantage that, notwithstanding forced circulation in a required direction, there was no need for flanges or flanged curves and caps under pressure, such as were found in some water-tube boilers. The steam, in the first instance, passed simultaneously through three distinct superheating tubes, then through two tubes only, and finally through a single tube. In order to get the steam through in this way, the steam velocities must increase in ratio with the interdependent tube cross sections. Assuming that the steam passed through the first three tubes with a velocity of 15 metres per second, it would rush through the next two at a velocity of $22\frac{1}{2}$ metres, and at a velocity of 45 metres through the last single tube. The velocities increased, therefore, with the superheating temperatures, and this could be effected at once, because the steam, as superheated, assumed the properties of a gas and showed hardly any trace of frictional loss, so that there could be no danger of throttling or choking. With saturated steam, on the other hand, extensive throttling was set up as soon as the speed exceeded a certain limit. A longer steam passage was secured with increasing velocity of the steam in the superheating tubes, and, in consequence of its accelerated motion, the steam took up more heat units from the combustion gases, which effected better cooling of the tube-heating surface, and made for efficiency and durability of the apparatus. As superheated steam was a bad conductor of heat, in ordinary superheater tubes there were different degrees of temperature at the tube walls and in the

Herr Hans Reisert.

centre. The tube surfaces were, therefore, not fully utilized, and in order to overcome this defect a simple device had been introduced in this superheater to cause mixing of the steam. This was shown in Fig. 51. As would be seen from the illustration, the

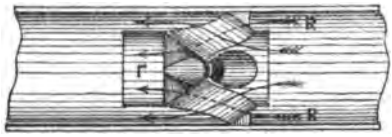

Fig. 51.

outside layer of steam, in passing along the tube walls, was caught up by the ring R, without throttling the flow of steam, and was carried into the centre of the tube through four channels which opened into the inner tube *r*, whilst the steam flowed along the centre and was conveyed through four other channels to the surface of the tube. After a certain distance the same process was repeated by the next steam mixer, and thus any degree of mixing could be attained and the coolest portions of the steam always brought in contact with the tube surfaces. This ensured the greatest amount of superheating, because the heat receptivity of the steam was in direct proportion to the difference between its temperature and that of the combustion gases. In other respects this superheater was constructed on the lines of good water-tube boilers, with metal to metal joints, and it could be applied to any kind of boiler, or arranged for independent firing.

Professor STORM BULL (University of Wisconsin) observed that the subject was at the present time of such great importance, that it deserved the closest attention of all engineers interested in the steam engine. It was not too much to say that the only hope for fairly successful competition of the steam engine with the gas engine, rested in the use of highly superheated steam. Without such use the battle was already lost, as evidenced from recent performances of gas engines in connection with producer plants.

And it was also fairly possible that the steam turbine, also by means of superheated steam, would in the long run, in a great many instances, prove to be the most economical steam motor. Fortunately for the steam engine and for the manufacturers of the same, there would always, it seemed to him, be a large field open to them, provided the designers kept up with the best and most progressive ideas with respect to the use of superheated steam. For ocean going steamers, he doubted very much whether for a long time to come at least, either the steam turbine or the gas engine would become a real competitor of the reciprocating steam engine. It was therefore probable that the great ship building industry of Scotland, which the Institution so ably represented, would not feel the competition of the gas engine so keenly as the designers of the stationary steam engine. The very rapid increase in the case of superheated steam during the last few years, was in itself the very best answer to the question, so often repeated in technical papers, whether there really was an economy in its use. With many thousand installations all of which cost a good deal of money, it would, it seemed, be foolhardy to question the economy of the investment as a general thing. When to this were added the results of a very large number of accurate tests, anybody with competent insight must be convinced that the superheater had come to stay. The question whether one had the right to expect a gain in economy on theoretical grounds, seemed to be a secondary one. It was very likely true that one had no right to do so, neither could any gain be expected from the compound engine as compared with the single-expansion engine on theoretical grounds, but nevertheless, the gain was real, and it was on that side that the practising engineer was looking. The reason why one had the right to expect an increase in economy by superheated steam, was, as was well known, the reduction of cylinder condensation, especially during the admission period, and not during expansion as stated by Rankine, and quoted by Mr Rowan. The other two reasons given by Rankine were not valid at the present time at least.

Prof. Storm Bull.

Superheated steam was certainly not used at present in order to raise the temperature at which the fluid received heat, as everybody knew that one of the most serious objections to its use had been the high temperature. From theoretical reasons Rankine's reason had of course its validity. Another reason given by Rankine to diminish the density of the steam, seemed now entirely unimportant. It might have been noticed by a good many that in various editorials in technical papers, it was stated as a fact that a separately heated superheater could never be a paying investment, that the only manner in which it could be made to pay, was to instal it in such a manner that the temperature of the flue gases might be reduced before reaching the smoke stack. Both of these statements were wrong, as proved by various tests of separately heated superheater plants with boilers and engines. The trouble was that these editors did not thoroughly understand why the superheated steam showed a gain in practice. The cylinder condensation depended especially on the temperature of the saturated steam, and of the condenser, as well as the cut-off. Theoretically it would be profitable to use steam of very high pressure, and an early cut-off. But because of the condensation, this cut-off could not in practice be made so short as to get the full benefit of the steam pressure. This was true whether it was a single cylinder, compound, or triple-expansion engine. What one gained by the increased expansion was more than lost by the increased condensation. When the question of the installation of a superheater arose, it would have to be decided whether the increased cost of producing a sufficiently superheated steam was less than the waste occasioned by the cylinder condensation. As was well known, this cylinder condensation might almost entirely be done away with by means of highly superheated steam, and various accurate tests had shown that a considerable amount of fuel might be spent to produce this superheat in order to reduce the cylinder condensation, and that there still would be left quite a margin of economy in favour of the plant using superheated steam. Very frequently the temperature of the fuel gases leaving

the boiler could not be lowered without impairing the draught. In such a case the installation of a superheater in the boiler setting, or between the boiler and the smoke stack, would be worse than useless. But he was free to state that he was fully convinced that a separately heated superheater would be a paying investment, provided that economy was desired and that the cost of coal was not very low. Attention had already been called in the discussion to the fact that the specific heat for superheated steam, as computed by Regnault, had too low a value for steam superheated to the extent as now practised. From recent investigations, it seemed that there could not be any doubt whatsoever, that this value was not constant, but increased with the degree of superheat. A good deal more work was needed in this direction before one would know as much about the properties of superheated steam as one now knew about saturated steam; but, to judge from the amount of work which was now being done in this direction, especially in Germany, it would not be so very long to wait before the whole subject would be thoroughly cleared up. Before concluding, he desired to state that he had read with a great deal of interest both the excellent paper and the valuable discussion. He was very certain that no timelier subject could be taken up for discussion.

Mr ROWAN in reply said he must thank the Members for the favourable reception they had given to his paper, which was intended more as an introduction to the subject than as an exposition of it; and he thought the Institution was to be congratulated upon the amount of interesting information which had been communicated in the discussion. The description of the Cruse system, and the valuable particulars contributed by Professor Jamieson, would probably be considered as by no means the least interesting part of that information. He was in the fortunate position of having no special interest in any superheater, so that he endeavoured to give effect to the desire that all should be fairly represented and discussed. Mr. Constantine would find at page 12 of the paper, that mention of the superheaters having

Mr Brown.

"Field," or more properly "Perkins," tubes had not been omitted. He was glad that Mr Judd had expanded the comparison between the engines using superheated and those using saturated steam, referred to in the paper, because in it the object was not to demonstrate the value of superheated steam over saturated steam, but was only to show that statements had been made both for and against that contention. A demonstration would have required a much longer paper. The remarks of Professor Watkinson as to the scoring of piston rods, and other parts, showed the advance that had been made in the use of superheated steam, because that which used to be one of the great evils charged against it was now not only overcome, but was actually reversed in its favour. No doubt in early days there were chemical actions entering into the problem, but it was satisfactory to see that these had been comprehended, and that their cause had been removed. Professor Watkinson disagreed with the quotation from Professor Thurston; but Professor Watkinson had omitted to notice the way in which the case was put on page 19 of the paper. Professor Thurston merely said that "if steam at the pressures and temperatures quoted, were worked in a Carnot cycle," the result would be so and so. The application of the Carnot cycle of reasoning to engines using superheated steam had, however, also been made by Professor Ripper, and Professor W. C. Unwin said of it that "he did not sensibly differ from the use made by Professor Ripper, of the Carnot measure of efficiency." So that apparently, as of old, "doctors differ." Mr Cleghorn also challenged some of the statements made in the paper, but all he could say was that he had quoted the actual words of Professor Ripper, in describing his temperature-entropy diagram, and before doing so, he had read the criticism in the discussion on his paper. That criticism was not so severe as Mr. Cleghorn imagined, because, although Professor Unwin objected to the introduction of the term "mean-temperature," yet he said "no doubt the term was used in a sense which involved no error; but there were all sorts of 'means'. The mean temperature intended was not,

as might be supposed, the mean of the initial and final temperatures, which would be wrong." In replying, Professor Ripper said that "he did not think that his use of 'mean temperature' would be misunderstood, as suggested by Professor Unwin: besides if it were, the error would be extremely small within ordinary ranges of temperature." Under these circumstances he decided to retain Professor Ripper's explanation of the diagram, but he would have been glad if Mr. Cleghorn had seen his way to contribute a more accurate description. With regard to the figures on page 18, the calculation was originally Rankine's, but the form given to the expression of thermodynamic efficiency in Professor Thurston's paper seemed to be slightly more simple, than that in Rankine's "Steam Engine," and therefore, he made use of it in preference to taking Rankine's figures. The calculation was not expressed in precisely the same way in both works. Mr. Riekie in his interesting remarks, referred to several important subjects, which were allied to that with which the paper was more directly concerned. With regard to the forms of superheaters, while it might be difficult to-day, to suggest anything very novel, yet new methods of working might be proposed, as the various problems connected with superheated steam became better understood. The ingenious system of Mr. Cruse, was an illustration of this, as were also some points in Professor Watkinson's and Mr. Reisert's designs, which dealt with the conditions of heat transmission. These conditions really explained why Mr. Riekie did not obtain a better result from the water-tubes across the fire-box of his locomotive. These tubes were badly placed for the generation of dry steam, and any steam which was formed in them was exposed to the cooling action of the tie rods conducting heat from it, or from the water in the tube, to the outside shell of the boiler, after the analogy of the inner tube in the Cruse superheater, the steam being also delivered against the outside plates, as well as under the water there. Moreover, any heat which was taken up by these water tubes diminished the power of the hot gases to transmit heat efficiently in their subsequent

Mr Rowan.
passage through the smoke tubes. These water-tubes, therefore, really acted in the opposite way to the blocking up of some of the smoke tubes which had been found in several experiments to increase the efficiency of the surface of the remaining tubes. He hoped that the note sounded in Mr. Constantine's remarks, would not be forgotten, and that interest in the various questions, connected with superheated steam would increase. Little had been done as yet to determine the exact specific heat, the effect of augmented volume, and other fundamental matters. In his recent "James Forrest" lecture, Mr. W. H. Maw remarked, that "A serious defect in a very large number of the experiments on superheated steam hitherto carried out, is that they have been made on the use of such steam in more or less defective engines of ordinary design, primarily intended to be worked with saturated steam. No doubt the results so obtained are of interest, but to determine the full economic value of superheated steam it must be employed in engines specially constructed for its use, both as regards the materials employed, and the design of many important details. And in connection with this matter, we are much in want of a thorough determination of the physical properties of superheated steam extending over the range of temperatures and pressures likely to be employed in practice. . . . Equally desirable also, is the thorough investigation of the action of steam, in the various types of turbine-motors; a matter which has, as yet, been by no means dealt with so exhaustively at its great, and rapidly growing practical importance deserves, and respecting which many lessons undoubtedly remain to be learnt." It was satisfactory to learn that an investigation into the specific heat of superheated steam, was being carried out by Mr. H. Cruse, and that some careful tests with a special steam engine, carried out independently by Professor Schröter and by Mr Vinçotte, were recorded in a recent bulletin of the Belgian Electrical Society, and some also in a paper read by Professor Jacobus, to the American Society of Mechanical Engineers, and it was to be hoped that such investigations would speedily be multiplied.*

Mr Rowan.

Professor Storm Bull's interesting communication also showed that the subject was attracting investigation amongst American engineers and men of science. In connection with this subject, much importance attached to the introduction of nickel steel tubes, containing from 23 to 30 per cent. of nickel, which had been found to have nearly 3 times the life of mild carbon steel tubes, under the actions likely to be met with in superheaters and boilers. These tubes were made in France, Germany, and America, but as yet, not in Britain, although their advantages had been pointed out by Mr. A. F. Yarrow in a paper read to the institution of Naval Architects (Vol. 41, pp. 333-346), and by Mr. A. L. Colby in a paper read to the American Society of Naval Architects and Engineers at their 11th Annual Meeting.

The Chairman, Mr E. HALL-BROWN, Vice-President, felt sure that all present would join in according a vote of thanks to Mr Rowan for his paper, which was a valuable one not only for the information it contained, but for the illustrations accompanying it, and also for the additional information which it had brought out in the discussion

The vote of thanks was carried by acclamation.

---

* Messrs. Careis of Ghent, Belgium, now guarantee a consumption of 8·8 lbs. per H.P. at a pressure of 160 lbs. and a temperature of 350° C. on entering the high-pressure cylinder, or 370° C. on leaving the superheater. The engine was a triple-expansion one of 1200 H.P. the intermediate and low-pressure cylinders being steam jacketed.

IMPROVEMENTS IN VALVE-GEARS.

By Mr John Riekie (Member).

(SEE PLATES V. AND VI.)

Read 27th October, 1903.

The author desires to emphasize the point that this paper is not presented in the light of an historical treatment of the subject, in fact such a treatment would, in his opinion, be of less interest to the majority of those present than it is hoped the method selected may be.

The numerous attempts which have been made to introduce an improved valve-gear, superior to any other already in use, are in themselves proof that there still exists room for further improvement and scope for new ideas, which, although in a great measure springing from principles well known, may still retain in a more or less degree the essence of novelty, and so have the effect of advancing the objects in view by all who set themselves the task of designing a new valve-gear.

Practically speaking, there are on the market only two kinds of valve-gear, of the class in which only one valve is used, which may be said to be generally adopted as standard types, viz., the Stephenson and the Gooch link type. This latter appears to have received the most attention from inventors of the many various forms of radial valve-gears. It is, moreover, supposed by some to be in its best form when a separate lever is used to control the lap and lead, as it then gives a somewhat longer dwelling motion to the valve at certain parts of the stroke. In practice, however, this dwelling movement appears to be of no advantage whatever, indeed, the Stephenson link motion is still able to hold its own against the best gears on the market, and is still by a great number of engineers preferred to that of the best radial gears, such as the "Joy" and "Walschaert," &c., for locomotive work.

A little consideration will perhaps make clear why it is that no

particular type of gear has a decided advantage as regards economy in steam consumption over that of any other.

It is well known that the movement conveyed to the valve of a horizontal engine is the resultant of two movements, viz., a horizontal one, giving a movement to the valve equal to twice the lap plus the total lead, and a vertical one to give the port opening. These movements can be conveyed to the valve either in combination or separately. The movement, when combined, can be used either with a Stephenson or Gooch link, rocking the same about its centre to give the port opening, and at the same time giving it a backward and forward motion to control the lap and lead. These movements can be had from the use of one or two eccentrics or from the connecting-rod or crank-pin or any other part of the engine which will give a combined vertical and horizontal movement. Similarly the movement can be actuated separately, using a separate lever to control the lap and lead. The results, however, are practically the same as regards economy in steam consumption. Were models of all the numerous gears placed side by side, and the levers of each placed in mid-position, it would be found that every one would give a movement to the valve equal to the lap and lead only. Placing the lever forward to cut off at 20 per cent. of the stroke of the piston, would give a slight advantage in favour of the radial type of gear, owing to the longer dwelling motion claimed. This, however, is of no practical value, as the port opening is only slightly in excess of the lead, in fact, the advantage of the dwelling movement is balanced by the increased port opening of the Stephenson link, which has a greater lead than the radial type when linked up. Generally speaking, therefore, there is practically no advantage in using any particular type of gear, except from its suitability for any special design of engine. In this connection a good deal of importance is often attached to the number of pins and working parts when selecting a valve-gear. Curiously enough, in actual practice this is of minor importance as regards wear and tear of machinery. A valve-motion having twelve

or more pins, if properly designed and made from the best material, will practically last quite as long and give no more trouble than one with six or even a less number of pins. The chief object to be aimed at in selecting a valve-gear should, therefore, be to get one that will give the best possible distribution of steam in the cylinders, so as to effect a decided gain in economy in steam consumption; plainly speaking to get the greatest possible amount of work out of the steam before exhaust takes place.

The object of this paper is to represent the advantage to be gained by a method of securing a long dwelling movement to the valve, not at the ends of the stroke, but at half-stroke of the valve. Before describing the gear in question, it may not be out of place to say that similar to most improvements, the old adage of "Necessity being the Mother of Invention" applies in this case. The necessity for improvements in valve-gears was forcibly brought to the notice of the author when conducting experiments with his continuous expansion system as applied to compound locomotives, which requires that steam should be cut off very early in two high pressure cylinders as against the existing practice of cutting off late in one high pressure cylinder. It was found from actual results, when using both the Stephenson and radial type of gear, that the benefit which might have been expected from the use of a wide range of expansion due to the very early cut-off was not realised, owing to the exhaust passages of the high pressure cylinders being closed too early, thereby boxing up the steam in the high pressure cylinders instead of allowing the same to expand freely to do work on a large low pressure piston. It was this defect in valve-gears that induced the author to go carefully into the problem of devising some means of improving not any one particular type, but all forms of valve-gears.

From Fig. 1 it will be noted that a separate lever is made use of to control the lap and lead. At first sight one would naturally take it to be a combination of the "Joy" and "Walschaert" form of gear, but this is not the case, for the improvement can be applied to the Stephenson link motion and to many others. The

improvement claimed is attained by varying the length of the short arm of the lap and lead lever during the stroke. It will be noted that this is accomplished by allowing the short arm to slide in a slipper block rocking in a bracket, the latter being a fixture. This has virtually the effect of reducing the length of the short arm to a minimum when the piston is at half-stroke. Thus a long dwelling motion is given to the valve, which allows the steam to do work on the piston during a greater length of the stroke, and also keeps the exhaust passage open later at the opposite side of the piston. Any delay in the movement at half-stroke has to be made good when nearing each end of the stroke, and this arrangement results in accelerating the movement of the valve to steam admission and exhaust, so that it becomes practicable to have a large port opening, giving at the same time a rapid cut-off when the gear is linked up. These points can clearly be seen by following the movements of the model. Fig. 2 shows the improvement applied to the "Walschaert" form of gear; Fig. 3 that to the Stephenson link; Fig. 4 shows how the lever can be actuated from the use of an eccentric; Fig. 5 shows the paths of pins A, B, and C in mid-gear, with 20, 40, 70, and 80 per cent. cut-off; Fig. 6 illustrates diagrams taken with full sized models; the broken lines were obtained from the Walschaert motion with 20½ per cent. cut-off and full gear, the plain lines were obtained after the gear was modified, as shown in Fig. 2; and Fig. 7 shows the enhanced port opening and early cut-off resulting from raising the bracket, which virtually lengthens the short arm of the lap and lead.

A novel feature in the invention is that the lead can be varied while the engine is at work. This is achieved by making the slipper-block bracket movable vertically by a screw or other means. For instance, moving the bracket upwards virtually has the effect of lengthening the short arm of the lever, and so correspondingly increasing the lead. One of the chief benefits to be derived from this is that a greater volume of steam can be got into the cylinders when the engine is running linked up. It is needless to point out

Mr E. Hall-Brown.

that any increase of power is due not only to the increased amount of steam entering the cylinders, but also from the extra work that can be got out of the same before exhaust takes place plus the gain from a reduction in compression.

The advantage this gear has over that of the Corliss or Tripp type is that neither the range of cut-off nor number of revolutions require to be limited.

In conclusion, the author would like to point out that this improvement in valve-gear, in conjunction with his continuous expansion system, opens up a field for greatly improving all multiple-expansion engines, and will enable his compound system to compete favourably against any triple-expansion engine.

Discussion.

Mr E. Hall-Brown (Vice-President) said that long ago he thought he had finished discussing the merits of radial valve-gears. There were those present, no doubt, who had gone through the period of valve-gear invention which raged in engineering circles about 20 years ago, and who then had as much to do with radial valve-gears as to last them quite a lifetime. His feeling, so far as marine engines were concerned, was that no one valve-gear gave any better results than another, and the adoption of any special gear was merely a matter of convenience of arrangement in relation to the general design of the engines. Unfortunately, he had not the pleasure of hearing Mr Riekie's paper read, and he found considerable difficulty in following the most interesting part; he referred to the diagram that Mr Riekie gave of the valve-motion. He had no doubt that it would have been much clearer had he heard it explained by Mr Riekie, but in the state in which they found it in the Transactions he was afraid that very few of them would find the diagram easy to follow. He was not at all certain that he followed Mr Riekie's meaning, and it seemed to him that if his interpretation of the diagram was correct, Mr Riekie had got a very much larger port opening when working with an early cut-off than was given by the "Walschaert" gear.

That might be a matter of great moment to Mr Riekie for locomotive work, but he did not know that it was to those who were engaged in other branches of steam engineering; and upon the value of this increased port opening, alone, would depend the success or otherwise of that gear. If by means of getting a very much larger opening when working with an early cut-off, and a correspondingly late compression point during the exhaust stroke, Mr Riekie could gain something substantial in steam economy, then he thought that the valve-gear would be a success, but on that point he was just a little sceptical. In view of the amount of valve-gear research which had previously taken place, it was interesting to note that Mr Riekie had undoubtedly struck out in quite a new direction. He did not know that anybody had attempted to alter the length of the lever which one usually regarded as giving the lap and lead motion in a radial valve-gear, and he thought that Mr Riekie was to be congratulated in having done something quite fresh in this direction. Finally, he trusted that the merits of the gear were greater than in the meantime he considered them to be.

Mr Alexander Cleghorn (Member of Council) said that the previous speaker had drawn their attention to the diversity of valve-gears which were adopted for marine work some 20 years ago. That period was simultaneous with the introduction of the triple-expansion engine, and engineers were then finding their way towards the best arrangement of engine. As the triple-expansion engine, with cylinders along side of each other, occupied a longer fore and aft space than the compound engine of the same power, in order to reduce this length as much as possible, advantage was taken of the facility afforded by one or other forms of radial valve-gear to arrange the valve-centres on the athwartship sides of the cylinders instead of between the cylinders, which was the position most suitable for "Stephenson's" gear, then almost universally fitted. He had at that time designed engines fitted with various forms of radial gear, and of these, he believed the "Walschaert" gear to be one of the best. That

Mr Alexander Cleghorn.

gear he had applied to some sets of twin-screw triple-expansion horizontal engines for gunboats, and had subsequently sailed with the vessels. The gear received a considerable amount of care in its design, and the parts were strongly proportioned. It was found to run well, although the revolutions of the engines varied from 180 to 200 per minute, their aggregate I.H.P. being 2,500 In addition to the shorter engine, a radial valve-gear generally secured an almost constant amount of "lead of valve," irrespective of the point of cut-off, and this feature was a most important one in the case of war vessels, which spent the greater part of their time in cruising at reduced power. The conditional modification which Mr Riekie had brought before them came, therefore, as an agreeable surprise, and he was of opinion that considerable advantage could be taken of the adaptability of the motion of the valve, which the varying length of the "lap and lead" lever secured. Although the proposed modification gave a large port opening and a rapid cut-off, it combined this with a late compression, which was of great value in a locomotive engine, exhausting, as it did, to the atmosphere. But in a multiple-expansion condensing engine, the result of a late compression might be quite the reverse, and it was, therefore, with considerable interest and anticipation that he listened to the last paragraph of Mr Riekie's paper, which ran as follows:—"In conclusion, the author would like to point out that this improvement in valve-gear, in conjunction with his continuous-expansion system, opens up a field for greatly improving all multiple-expansion engines, and will enable his compound system to compete favourably against any triple-expansion engine." He thought that if Mr Riekie was able to fulfil his promises there would be ample scope for his gear.

Mr James Andrews (Member) thought that Mr Riekie might have extended his paper to the advantage of the subject, more particularly with reference to the steam openings of a valve operated by his gear as compared with the same valve operated by the ordinary link motion. It seemed to him, after having

examined the model, that the mean or average steam opening would be considerably greater with the Riekie gear than with the Stephenson link motion, when working at the same maximum steam opening; and, if that were the case, it appeared that a smaller valve might be used with the Riekie gear. He would have preferred to have seen diagrams illustrating this point embodied in the paper. Another important element which had been overlooked was the mechanics of the gear. Mr Riekie had stated that "The number of pins or working parts in a valve-gear was of minor importance as regards wear and tear of machinery," which was no doubt true to some extent; but much depended upon the load exerted upon the various pins or working parts of the gear. He would have liked to have seen this branch of the subject more fully dealt with in the paper, because it was generally the mechanics of a gear which determined its success or failure, and there were two features in the Riekie gear, which, according to his experience, were not altogether satisfactory. First, the sliding block, with its rocking motion, which he thought was originally adopted in the Hackworth gear, 'was very difficult to keep properly adjusted and well lubricated. Those defects led to the introduction of what was known as the Marshall valve-gear, in which a pendulum link was substituted for the sliding block. Now, it so happened that the history of that gear admirably illustrated the point that the number of pins or moving parts was of far less importance than the loads exerted upon those parts. The Marshall valve-gear might be made in two forms, with five pins in both cases. On the earliest cruisers, having horizontal engines, to which this gear was applied, the pendulum link was placed between the eccentric and the connecting-rod to the valve-spindle, as shown in outline on Fig. 8; and it would be observed that the load on the pendulum link and its pins would be approximately double that on the valve-spindle. This form of the gear gave a great amount of trouble, and during one of the trials which he attended it broke down, notwithstanding that it was driving piston-valves, which at that time

(1885) were supposed to be practically balanced. At a later date Mr Marshall described this gear as the "unfortunate form." Ultimately the design shown in outline on Fig. 9 was adopted, having the valve-spindle connection between the pendulum link

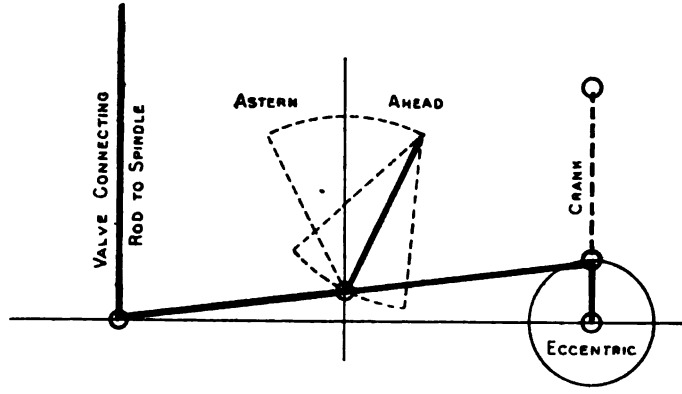

Fig. 8

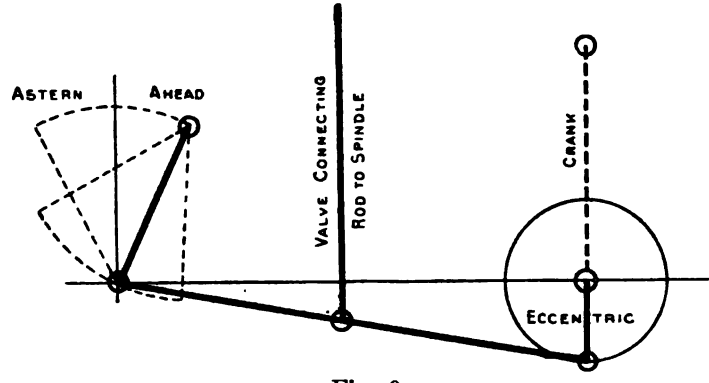

Fig. 9.

and the eccentric, so that the load on the pendulum link, its pins, and the eccentric were reduced to about a half of that on the valve-spindle. This gear has been very successful, and he believed was still being fitted. Reverting to the Riekie gear, it would be seen that the load on the pin B, Fig. 1, was practically

double that on the valve-spindle, and consequently this increased load must be carried by the remainder of the gear in a direct line to the eccentric, for a similar reason to that in the Marshall gear on Fig. 8. He thought that if Mr Riekie could introduce the pendulum link in place of the sliding block, and re-arrange the levers so as to reduce the loads on the gear, as was done with the Marshall gear, a considerable improvement would be effected by reducing the wear and tear.

Correspondence.

Mr CHARLES S. LAKE (London) was firmly of the opinion that Mr Riekie's improvement was a step in the right direction, and that it constituted a real improvement in this very important branch of engine construction. Many people had, as everyone knew, essayed to improve valve-gears, and he had closely followed the course of events in that direction, and had been much struck with the fact that most of the inventors had ignored—at any rate, very considerably—the principle involved in Mr Riekie's plan, which seemed to him to embody the true key to improvement, viz., that of accelerating the movement of the valve at those portions of its travel where rapidity of movement was desirable and advantageous, that was when nearing the points of admission and exhaust, and retarding the movement during the expansion period. That system was adopted, only of course in a somewhat different manner, in machine tools—especially those of American manufacture—in which the movement of the tool-holder was accelerated during the return, or "no work," period, while on the outward, or "work," period, whilst machining, it was very much slower.

Mr RIEKIE, in reply, said he was pleased to learn from Mr Cleghorn that a late compression in locomotive work was considered of great value. In the multiple-expansion marine engine the compression was also late, due to the late cut-off used; he, therefore, failed to see why the adoption of the improved gear should give reverse results to that of the locomotive, especially

Mr Riekie.

when there was the possibility of being able to cut-off earlier with this gear and so increase the number of expansions in the multiple-expansion engine. Regarding the improved compound system referred to, he would be pleased to read a short paper, entitled "Compound *versus* Triple-Expansion Engines." In his opinion, the triple-expansion engine had a threefold advantage over that of the compound system as now made, viz., a higher boiler pressure, larger piston surface, and the use of three cranks. The improved compound system he advocated had similar advantages to the triple-expansion engine; it, moreover, had two advantages which the latter did not possess, viz., continuous expansion of steam, thus requiring no receiver—and in being able to, at all times, expand the steam to the end of the stroke of the low-pressure cylinder, no matter what the boiler pressure might be. There appeared, therefore, no reason why the system he advocated should not only equal, but probably surpass, the triple-expansion engine in economy in steam consumption. Regarding the very large port opening referred to by Mr Hall-Brown, the want for this in high speed engines, such as locomotives, was at the present moment greatly felt, and it considerably handicapped this type of engine from attaining high speeds with heavy loads. Small port openings might be good enough for the long-stroke, slow-running marine engine as now designed. He felt convinced that the day was near at hand when marine engineers would be forced to turn their attention to the designing of high speed engines, otherwise the turbine would in all likelihood replace the reciprocating engine in marine work. To make the high speed reciprocating engine a success it was very important that very large port openings should be used, both to steam and exhaust. As this could be obtained from the use of the improved valve-gear, it would probably go a long way towards enabling the quick-acting reciprocating engine to more than hold its own against the turbine type of engine. With reference to the gain in power from the use of a late compression, he produced a set of indicator cards taken from a compound locomotive, the high pressure cylinders of which were fitted with

the Stephenson link motion, as also a card taken from a locomotive fitted with the improved gear, showing how the latter was fattened without any increase in steam consumption, and made clear the gain that was derived from a late compression. With respect to Mr Andrews' objection to the sliding movement, he did not anticipate the slightest trouble with this. An engine working at the high speed of 70 miles an hour showed no signs of heating or giving trouble; moreover, a similar objection had been raised to the "Joy" gear when first brought out, but this disappeared when the working parts were well designed. Respecting the load on the pin B, Fig. 1, this could be obviated by placing the lap and lead lever direct in the crosshead of the valve-spindle, and so dispense with the levers and pins shown in the model, which were designed to suit a special case in locomotive work. He had tried hard to substitute a pendulum lever for that of the sliding movement, but had to give it up as impossible. When the lap and lead lever was at half-stroke it ceased to act as a lever, so that it was impracticable to get a lever with a given ratio to meet the case. He desired to thank the Members who had taken part in the discussion.

The CHAIRMAN (Prof. J. H. Biles, LL.D., Vice-President) said he was sure that Mr Riekie's proposed paper on Compound *versus* Triple-Expansion Engines would create a good discussion, as it would embody views entirely different to those held by all engineers during the last twenty years. Mr Riekie's paper on Valve-Gears was a most interesting one, but he (the Chairman) felt that the real test of the improved gear would be to submit it to an extensive series of trials. He asked the members present to award a vote of thanks to Mr Riekie for his paper.

The vote of thanks was unanimously agreed to.

MARINE PROPELLERS WITH NON-REVERSIBLE ENGINES

AND

INTERNAL COMBUSTION ENGINES.

By Mr. RANKIN KENNEDY (Member).

(SEE PLATES VII., VIII., AND XI.)

Read 24th November, 1903.

THE introduction of internal combustion engines and steam turbines for marine propulsion requires the careful consideration of the fact that without some special contrivance these motors are not reversible.

The steam turbine when applied to larger vessels requires an auxiliary turbine for backing the vessel, and the high velocity of the screw propeller has been a matter for considerable experiment and one which has introduced new problems for solution.

This paper may, therefore, serve to direct attention to the consideration of other propellers than the screw, and to bring together various methods of employing the screw propeller, for examination.

There are five systems whereby a vessel may be propelled and controlled when driven by a non-reversible motor :—

1. By means of a screw propeller, with movable reversible blades operated by a sliding rod through a hollow shaft. This is a favourite method for small craft.
2. By means of a screw propeller, and mechanical reversing gear, usually in the form of friction clutches and spur wheels.
3. By two screws, a right and a left-handed screw, connected by a sliding rod through a hollow shaft, whereby either screw may be loose, and the other locked and driven, or both locked or loose.

4. By electrical control, the engine driving a dynamo and a motor driving the screw.
5. By water-jet propellers.

I shall not refer to all the systems for starting oil engines on board vessels, for that is a question worthy of a paper in itself. It may be observed that there are no starting difficulties with the steam turbine, nor with an oil engine coupled to a dynamo, for a starting accumulator is a small affair, and quite effective to set the engine in motion

The first system referred to can be very well shown by a diagram, Fig. 1, made from the propelling gear of small vessels built by Messrs. Vosper, of Portsmouth, and driven by oil engines using ordinary paraffin oil. The blades are reversible by the lever and screw worked by a hand-wheel as shown. In the mid-position of the lever the propeller may run with the blades set to thrust equally fore and aft, the one thrust annulling the other, or a clutch may preferably be used to disconnect the propellers in the stop position. A similar method is also adopted by the Mitcham Motor Company, of Cowes, Fig. 2, who make little marine oil engines for launches and small yachts, and by many others. It is perfectly satisfactory for very small powers, with screws up to about 2 feet in diameter.

The second method is often used for larger powers, and when well designed and well made works satisfactorily. One form of reversing gear, Fig. 3, may suffice to show the general application. It consists of three bevel wheels, A, B, C, with two friction clutches working inside the wheels A and B. A lever is applied to throw either clutch in or out of gear. In the middle position both clutches are out of gear and the engine runs free, the screw being at rest. The engine shaft does not extend beyond the first bevel wheel A, which is either keyed to it or forms part of the engine fly-wheel. When going ahead the propeller shaft is clutched direct to the engine shaft so that the gear wheels C and B simply run idle, and transmit no power. But when going astern the bevel wheel B is clutched to the propeller shaft which is then driven through the

gearing. This is one of many forms of reversing gear possible, and has been found successful with considerable powers.

The third method has been adopted by the "Griffin" oil launch and boat builders, Fig. 4. This arrangement consists of two ordinary screw propellers of right and left handed pitch respectively, the forward propeller being mounted on the end of a hollow shaft which extends into the interior of the boat. Through this hollow shaft a second shaft passes, and on the end of the latter is mounted the sternmost propeller. Both propellers are thus free to revolve independently of each other. A double friction-clutch attached to the engine shaft, and actuated by a hand lever, is connected with the ends of these shafts in the interior of the boat, the arrangement being such that either of the propellers may be engaged with the engine, or both may be simultaneously disengaged. It will thus be seen that by the simple movement of the hand lever the whole operations of starting, stopping, and reversing the boat, are effected without stopping or reversing either the engine, propeller shaft, propellers, or any part of the driving mechanism; while owing to the entire absence of toothed gearing or racks of any kind, its action is absolutely noiseless and free from jerk or shock.

The advantages claimed for this arrangement are many. There is no shock when the propellers are disconnected or put in motion. There are no cogs, racks, or gearing of any kind to get out of order. There is stated to be no obstruction to the movement of the boat when the propellers are out of action, which is said to render the boat so fitted specially suitable for canals. The operations of starting, stopping, reversing, and steering can be controlled by one man seated at the stern. With regard to the claim that there is no obstruction to the movement of the boat when one of the propellers is out of action; experiments have been made, and no difference either in speed or oil consumption could be detected over a measured distance with an idle propeller free to revolve, or with the propeller removed.

These, then, are the three methods proposed and used with

screw propellers driven as nearly direct as possible from the engine.

The fourth system also employs the screw propeller, but the engine is not connected to the propeller by any shafts or gearing and may be placed anywhere convenient, while its power is transmitted electrically to a motor on the propeller shaft. This system has been used on road vehicles with some success, and may be more successful on boats of larger powers. Vessels fitted with the first and second systems have not been built of larger sizes, say, than 50 horse power, and only for moderate speeds of from 7 to 10 knots, with a few exceptions to be referred to later. For larger powers and higher speeds something different is required. Clutches, and gearing, and loose screw blades, or two loose screws, are all very well as far as they go, but when the use of large internal combustion engines and high speeds are contemplated, something more reliable mechanically and of greater strength is necessary. In a large vessel the addition of the dead weight of the motor and dynamo required to operate the fourth system is not a serious matter, while it offers several distinct advantages. The propeller shaft may be short and the motor astern as far as possible while the engines and dynamo can be placed forward. The vessel can be controlled from the bridge, or lookout, both as to speed and stopping and starting. A small auxiliary engine and dynamo for electric lighting of the ship can be used to start the large engines, after which all reversing and manœuvring should be done by switches. This system also offers advantages to small steam turbine engines like the de Laval, in which the engine and dynamos are, due to the high velocities, small, light in weight, and take up little space, a 300 horse power de Laval turbine dynamo complete weighing only about 11 tons.

Of course, with the steam turbine must be included the boiler, a weight which is not necessary with internal combustion engines. And although I am aware of the fact that internal combustion turbines run by oil fuel have been brought to a considerable degree of perfection, yet they are not quite in a position to compete with

reciprocating oil engines. I submit that if the screw propeller is to be retained with non-reversible engines the power must be transmitted by some more flexible system easily controlled by simple means, and that many advantages are offered by electric transmission from the engine to the propeller in larger units.

The fifth and last system is not new, but has been used in vessels with some success, In this system the water jet propeller is adopted. This type of propeller has been discussed before in this Institution* and perhaps prematurely condemned, but things have changed since then, and it may now be looked at from the non-reversible engine point of view, or with the high speed turbine as its motive power. In the early jet propelled vessels the centrifugals employed to throw the jet were slow in speed, hence large in size, and not efficient. It may at once be admitted that the jet propeller has some well-defined limitations which will prevent it ever becoming a better propeller than a screw, in large steam driven ships employing reciprocating or other reversible engines. The column of water set in motion to produce the jet is limited in sectional area. In Ruthven's "Waterwitch," built in 1867, the area of the jets combined was 6·28 square feet, equal to $\frac{1}{53}$ of the midship section of the vessel, and the efficiency was 0·18. In Thorneycroft's hydraulic vessel, built in 1883, the area of the jets combined was about one square foot, equal to $\frac{1}{14}$ of the midship section, and the efficiency was 0·254. Efficiency depends to a large extent upon the sectional area of the jet being a very large fraction of the midship section.

The presence of a large volume of water on board the vessel is the chief drawback to the jet propeller. But by good design this volume can, however, be much reduced, for although the water must leave the vessel at a slow velocity in a large volume, it may pass along inside the vessel at a high velocity in a smaller column, and that

* Vol. XXXV., p. 15.

is one feature to which I beg to draw your attention. A second point to which more attention should be paid is to the intake of water, for the vessel can be propelled by the suction of the pump as well as by the pressure.

In Thorneycroft's hydraulic vessels, Figs. 5 and 6, the suction intake B, H, faces forward, so that the water enters freely with the motion of the vessel, and if the suction pipe were merely continued and led astern to an outlet, the vessel being towed, the water would flow with the speed of the vessel through the pipe, but the water would have no velocity relative to the still water outside the vessel. In Fig. 7, a diagram of a jet propeller, there is a clear passage for the water fore and aft through A, C, B. By means of a steam jet acting as in Morton's water lifter, the column of water can be set in motion, and by tapering the pipes it may pass quickly through the vessel as a small column, although it enters and leaves as a large column. Again, by arranging the proper size of the intake and outlet orifices, we might have a partial vacuum or suction at A and a pressure at B, both due to the impeller at C; and the thrust would be the sum of the forces acting at the suction and pressure orifices. It may be pointed out that in using a steam jet impeller at C, there would also be a reactive impulse due to the steam itself in the steam nozzle, for if the area of the steam jet orifice equalled 1 square inch, and the pressure of steam was 150 lbs., a useful effect or thrust of 150 lbs. would accrue—which under ordinary circumstances is lost, and this in addition to the thrust due to the water. With some slight modifications this presents an ideal propeller, in which no engine with moving machinery is required. Although the jet propeller driven by a steam jet is not highly efficient, it may in some cases have counteracting advantages. It has one drawback when used at sea, and that is the condensed steam is lost. I need not dwell on the subject of steam jets (their inefficiency is too well known), but will pass on to the further consideration of the water jet propeller. Whatever impeller is used at C, there are some further points to observe.

In this simple arrangement the propulsion would be at A,

due to suction; at C, due to the reaction of the steam, plus that due to the momentum of the water flowing away through B, outside of the vessel. To obtain the thrust of the pump due to its pressure, the water should be arrested somewhere between the pump and the outlet, so that it might flow away with the proper velocity, and produce an unbalanced pressure in the direction the vessel is to move.

The impeller was therefore made, in a recent case, to deliver the water into a pressure chamber, where its momentum was converted into pressure gradually, through cones, in the well-known manner of injectors. The water was discharged from the side of this chamber opposite in direction to the motion of the vessel. This gave good results, and is still under experiment.

The impeller hitherto used has been a centrifugal pump. A diagram of this arrangement is shown in Fig. 8. The pump P delivers into a cylinder V, which, besides acting as a pressure receiver, also acts as a valve regulator whereby the vessel may be stopped, started, slowed, accelerated, or reversed by one lever without regard to the engine, which may run steadily on under a governor all the time. The valve V is made so that when it opens the forward nozzle N it closes the aft nozzle N_1, and when in the mid-position both nozzles are half open. By this means the flow of water is never violently checked, and high velocities of flow through the pumps can therefore be used. When the vessel has to stop for any considerable time, the engines are of course stopped.

This arrangement, it will be observed, is one suitable for internal combustion, and steam turbine engines which are not conveniently reversible.

As to the question of efficiencies, I am unable to give practically ascertained results of the five methods on any sufficient scale, but the theoretical results may be of interest together with the practical tests available.

In the Thorneycroft hydraulic vessel of 1883, the engine efficiency, *i.e.*, the brake horse divided by the indicated horse power, was

$\frac{\text{B.H.P.}}{\text{I.H.P.}} = 0{\cdot}77$, the pump efficiency was 0·46, and the jet efficiency 0·71, which gives a total efficiency of 0·251. The remarkably low pump efficiency is surprising, and no less the engine efficiency. These figures were given as results of tests by Mr S. W. Barnaby before the Institution of Civil Engineers.

Engines and pumps can now be obtained to give better results. Last year Mr Konrad Andersson read a paper before this Institution, in which he stated (Table III.) the efficiency of the de Laval turbine pumps to be as high as ·75 and ·8. In the same paper the pounds of steam per brake horse power are given, and in Table VI. the pounds of steam consumed per water horse power are stated to be from 29 to 34·2 per hour Taking the efficiency of the pump and engine at 0·75, and the efficiency of the jet at $0{\cdot}\dot{6}\dot{6}$, then a total efficiency of 0·498 is quite possible on a consumption of steam upon the jet equal to 31 lbs. per horse-power hour.

The jet propeller obeys the same law of efficiency as the screw propeller, namely—

$$\frac{V}{V + \frac{s}{2}}$$

where V = the velocity of the ship in feet per second and s the slip.

Assuming a speed of 20 feet per second for the ship and the same for the slip s, we get $\frac{20}{20 + \frac{20}{2}} = 0.\dot{6}\dot{6}$ efficiency of the jet.

The thrust would be equal to the area of the throat multiplied by the water pressure. The total reactive pressure would be that due to the velocities added, *i.e.*, 40 feet per second, and the head H would be $\frac{V^2}{2g} = \frac{40^2}{64{\cdot}4} = 24{\cdot}8$ feet, and the pressure due to this head = 10 lbs., nearly, per square inch. Hence an area of one square foot of nozzle would give a thrust of 1,440 lbs., and the quantity

of water to be delivered would be equal to the velocity multiplied by the area of the nozzle in feet, 40 × 1 = 40 cubic feet per second = 2,500 lbs. of water. This conclusion demonstrates the large volume of water required.

By an easy calculation the horse-power in the water in this case would be 90, and the engine indicated horse-power probably about 200.

Figs. 9 and 10 illustrate in elevation and plan a form of jet propeller connected to an oil engine. The pump P delivers into a vertical cylinder called the pressure chamber, shown in Figs. 9, 10, and 11. In Fig. 9 the centrifugal pump, P, is shown in elevation coupled direct to the engine E, with the pressure chamber C on top. Fig. 10 is a plan showing the delivery nozzles, N, N_1, N_2, N_3, two for going astern and two for going ahead. The pipes on one side of the boat are crossed in order to obtain a simple balanced valve for controlling the jets. This valve is shown in Fig. 11. It will be seen that either pair of tubes or jets may be opened or closed at will, and that the whole four nozzles could never be closed at once, the flow of water from the chamber being constant.

By making the valve in C double, the nozzles can be closed as desired and the boat steered by this same valve, and the pipes to the nozzles need not be in this case crossed as at H. Whatever the pressure in the chamber may be the pipes are expanded towards the discharge, so that at the nozzle the absolute velocity of outflow does not exceed the maximum speed of the vessel.

I have not shown any diagrams of the electrical system, as it only differs from the common direct drive by screw, but with an electric generator and motor interposed. With high speed steam turbo-generators it is worthy of notice, and some of our electrical friends may discuss that system further.

Having now surveyed the various propellers for available non-reversing engines, there remains of course the possibility of working internal combustion engines reversible. This can be done with success by the three-cylinder Bertheau engine and with

one or two other designs of oil engines. The Bertheau Engine is made and used by Thorneycroft for powers of 10, 15, and 30 B.H.P. and upwards.

In these reversing internal combustion engines compressed air or compressed burnt gases are stored in order to be drawn upon for starting, and the engine valves are adjustable by levers and cams so that they run normally as four-cycle engines, but start with compressed air or gases as two-cycle compressed-air engines.

The principal advantages of the Thorneycroft Bertheau Engine are claimed to be as follows:—

1. It can be started in any position of the cranks without the use of hand gear, and that instantaneously.
2. It can be reversed instantaneously.
3. The speed can be varied as required.
4. The crank shaft is connected rigidly and directly to the screw shafting.
5. The motor is quite as handy for manœuvring as a steam engine.

The facility in starting and reversing is effected by means of an ingenious valve mechanism, and a reservoir for compressed gases, the gases being forced into it automatically during the explosion in the engine, thus dispensing with a pump. The pressure in the reservoir is generally about 90 lbs. per square inch, and even if the motor is not in use this pressure can be maintained for several weeks. If the motor is in disuse for a long period and the pressure in the reservoir becomes reduced from any cause it is replenished with compressed air by means of a hand-pump before starting, but the necessity for this is of rare occurrence.

On one occasion a motor was laid by for four months, and the pressure was found to have fallen 2 lbs. per square inch only.

The most important novelty about the Bertheau oil engine is

that it is *reversible*, that is to say, the engine itself runs either way, and so can be connected rigidly to a screw propeller or other shafting without the complication of reversing clutches. This is effected by means of a double set of cams, which can be shifted by simply moving a reversing lever, as in the case of a steam engine. The engine is fitted with a reservoir containing burnt gases at a pressure of about 100 lbs. per square inch, for the purpose of starting and manœuvring. These gases come from the cylinder, and are admitted by means of a relief valve arranged to open at a pressure slightly below that of explosion. The reservoir is replenished by letting burnt gases enter for a few revolutions after starting. It is then shut off.

The engine has three cylinders, so that there are no deadpoints, it can therefore be started, stopped, and reversed instantaneously. The oil used is heavy petroleum, having a specific gravity from ·82 upwards, with a flash point of 86° F. or above. The consumption of oil is about 1 lb. per B.H.P. per hour.

The engine is made in the following stock sizes :—

B.H.P.	Revolutions per Minute.	Weight, including Automatic Starting Reservoir.
10	500	11½ cwts.
15	325	25 ,,
30	275	40 ,,

Note.—The weights given—which include reservoirs—are subject to slight modification, as they are somewhat dependent on the convenient disposition of the reservoirs.

This engine fitted to a 27-feet boat is illustrated and described fully in "Engineering," November 6th, 1903.

A two-cycle gas engine made some years ago under Day's patents would run in whichever direction it was started. It had no valves except a suction-valve on the crank chamber for air and

gas inlet. This type of engine was first patented by Mr H. P. Holt in 1884. In small sizes it may be stopped and started in the reverse direction by throwing the fly-wheel round in the direction it is desired to run. In larger sizes made with three cylinders it is started by compressed air, and cam levers; being a two-cycle engine, no matter at what part of a revolution it is stopped, one of the cylinders will be in a position to start if compressed air or gases are admitted. A cam shaft works the air inlet-valve for two or three revolutions, the gas and air charging-valve being shut. As soon as the engine is fairly started the cam shaft is thrown out of gear, the compressed air shut off, and the oil-charging valve opened.

Fig. 12 is a diagram of one cylinder of such an engine. The air and oil enter by a valve at the side of the crank chamber (if the oil is heavy a vaporiser is used), and the mixture is slightly compressed in the crank chamber until the piston reaches its lowest point; when the exhaust has been uncovered by the piston the burnt gases escape at the exhaust ports and the compressed gases flow in at the intake. It has been found that in this simpler form the gases in the crank chamber are apt in time to escape by leaking through the shaft bearings. At present these engines are made with a vaporiser on the top of the cylinder, and only fresh air is drawn into and compressed in the crank chamber.

Oil engines are not so bulky and heavy, for the power given off, as a steam plant, due to the fact that they require no boiler. They are, however, at best single acting, and mostly four-stroke cycles are used. Lately there has been a large increase in the number of motor boats driven by oil engines, and this fact may forecast the adoption of this type in large vessels of the future.

In the description given in "Engineering" of the Thorneycroft motor boat, the following comparison is made with a steam cutter as supplied to the Royal Navy. It may be of interest:—

	Steam Cutter.	Motor Cutter.
Length, ...	27 ft.	27 ft.
Beam, moulded, ...	6 ft. 9 in.	6 ft. 10 in.
Depth, ...	3 ft 11 in.	3 ft. 9 in.
Draught, ...	2 ft. 6 in.	2 ft. 3 in.
Displacement, ...	4·29 tons.	3·42 tons.
Speed, in miles, ...	9 miles.	8 miles.
Power, ...	15 I.H.P. or 13 B.H.P.	10 B.H.P.
Fuel, ...	5 cwt. for 12 hours.	3 cwt. for 30 hours.
Length of Machinery, ...	9 ft.	4 ft. 6 in.
Weight, ...	27 cwt.	13 cwt.
Fuel per hour, ...	0·4 cwt.	0·15 cwt.
Fuel per horse power hour,	3·7 lbs.	1·1 lbs.

The results of the Harmsworth cup trials at Cork on 16th July, 1903, proved that small boats can carry sufficient oil engine power to run over a nine-mile course at the rate of about 20 knots. The largest boat was 40 feet long, and, it is said, carried engines of 75 horse power. The second boat was 30 feet long with engines of 50 horse power. And the third a Thorneycroft boat also 30 feet long with propelling machinery of 20 horse power.

The speeds were for:—

No. 1 21·7 knots.
,, 2 19·5 ,,
,, 3 17·7 ,,

To sum up I find it is generally conceded that the movable screw blades is only acceptable on the smaller launches and dingheys probably up to 5 horse power.

The mechanical clutch gear is more efficient and less liable to accident, and is reliable up to about 10 horse power, and may be tolerable in even larger powers up to 25 horse power.

For larger powers there is little experience to go upon; but there is the choice between—

1st. The oil engine, manœuvred and controlled as a compressed air engine when starting and reversing.
2nd. The water jet propeller and pump.
3rd. The electric motor with a dynamo on the engine and a motor on the propeller.

The subject has in this paper been considered not with any intention of raising any questions of fast speeds, these may be obtained for sporting purposes, without much regard to good engineering. The boat contemplated in this paper should be a safe comfortable and durable vessel with machinery designed to run for years, with little trouble and expense. A breakdown in a boat is a far more serious affair than a failure on a road vehicle; in the former case we cannot climb down and walk, nor can assistance be so readily obtained.

Discussion.

Mr T. Blackwood Murray, B.Sc. (Member), said that as a maker of high-speed internal combustion engines he was naturally interested in their application to the propulsion of vessels, and he thought there was comparatively little doubt that within a very few years the internal combustion engine would entirely replace the steam engine for the propulsion of small craft up to, say, sizes of 100 horse power. The fact that internal combustion engines could be started within a few seconds, and that they could run automatically in every respect for at least periods of 24 hours, gave them tremendous advantages over steam engines with their attendant boilers, which required practically constant attention. He had an opportunity the other day of seeing a very good collection of the latest marine type of internal-combustion motors at the Paris Automobile Exhibition, and he noticed that while for the small sizes, up to say 5 horse power, the feathering blade propeller still held its own in connection with the two-stroke cycle engines,

Mr T. Blackwood Murray.

mostly of American make, for larger powers the makers were generally adopting the four-stroke cycle engine and a type of reversing gear rather different from what Mr Kennedy had shown in his paper. In fact, advantage had been taken of the experience gained in motor car work, and in most cases the power was transmitted from the engine fly-wheel by a leather-faced conical friction clutch. That clutch was held normally in contact by a spring. The fly-wheel formed the one-half of the clutch, and the other half slid, and rotated freely on the extension of the engine shaft, and formed a gear box containing an epicyclic train of spur wheels or balance gear, of which the forward centre wheel was keyed direct to the engine shaft, and the rear centre wheel was keyed to the propeller shaft, while the epicyclic pinions were carried on pins mounted in the sliding portion of the clutch. The clutch was withdrawn by a hand lever, and this same lever tightened a band brake round the sliding portion of the clutch as it was drawn out of engagement In the central position of this lever the clutch was free, as was also the band brake, consequently the sliding portion of the clutch rotated in the same direction as the engine at one-half its speed, and the propeller remained practically at rest. When the hand lever was drawn right back, the band brake brought the sliding portion of the clutch to rest, and the propeller was then driven in the reverse direction to the engine. Figs 13 and 14 were illustrated views of a 24 horse-power Delahaye four-cylinder motor fitted with such a speed change gear, and it might be taken as typical of the latest and best French practice. That gear seemed to leave nothing to be desired, as under normal conditions—namely, when running ahead—the whole gearing revolved solidly, and there was consequently no wear or tear on the spur gearing, as the spur wheels were at rest relatively to each other. The change to reverse was made without shock, as it was carried out by a leather-faced band brake, which brought the sliding portion gradually to rest. By varying the pressure on the friction clutch with the hand lever, any desired revolutions could be transmitted to the propeller with the engine running at normal speed, and

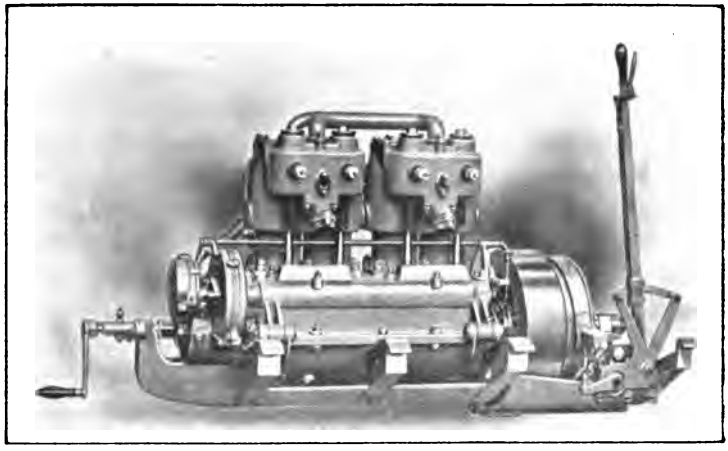

Fig. 13.

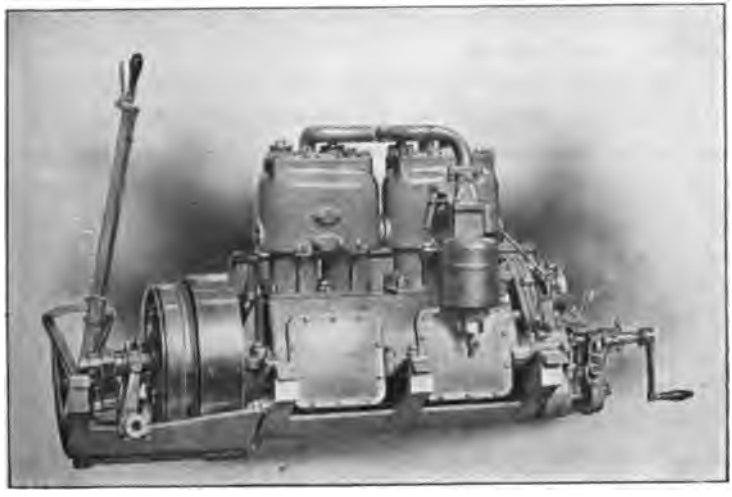

Fig. 14.

Mr. T. Blackwood Murray.
owing to the mass of metal in the rim of the fly-wheel forming the outer portion of the clutch it would take quite a considerable time to overheat it. He saw no reason why a similar design of gearing to this should not be successfully used up to at least 100 horse power, and he imagined it would be cheaper, lighter, and probably more efficient than a water-jet propeller. The largest engine of this type for marine purposes which he saw was of the four-cylinder type, capable of developing 180 horse power. To him, it was a wonder that in this district more attention had not been paid to such craft, because there was every facility to build and equip them, and there was certainly a very great market for them.

The CHAIRMAN (Mr E. Hall-Brown, Vice-President)—When the vessel was running astern, and the pressure on the spring kept the clutch and gear on the rubbing surface, he presumed there would be some trouble.

Mr BLACKWOOD MURRAY—No trouble arose from this cause, as the pressure of the spring was taken up by a ball thrust bearing which would run for practically any length of time with the full load of the spring upon it.

The CHAIRMAN said that he had hoped that someone would have given some details as to the working of friction clutches for the purpose discussed in the paper. A most interesting example was the clutch invented by Professor Hele-Shaw, which got rid of the pressure of the spring when the one clutch or the other was out of gear. There was no end thrust when the clutch was out of gear and no necessity to hold the spring back. A large number of such devices was coming into the market, because the demand had arisen for them. It would be a pity to close the discussion on such an interesting subject, as it was one that was coming into great prominence at the present time. He did not know that the shipbuilders of the Clyde were aware of it, but it was a fact that there was a demand for small craft driven by internal combustion engines, and if they did not take the matter up, others would.

Correspondence.

Mr S. GRIFFIN (Bath) noted that Mr Kennedy had referred to the system of "Bi-unial" screw propulsion, which had (until quite recently) been the standard system of his firm. It had all the various points of novelty and adaptability to its purpose with which Mr Kennedy credited it. Its success had been very marked in the barge "Royal Daylight," working on the Mersey at Liverpool, to which it had been fitted, together with "Duplex" Hydro Oil Engines of 60 I.H.P. The reversible bladed propeller referred to was, of course, suitable only for very small craft, in which efficiency and mechanical stability were of secondary importance; its consideration might therefore be neglected in dealing with craft of any size for commercial purposes. He considered that Mr Kennedy was very unfortunate in his illustration of a typical reversing gear for use with a single propeller. This arrangement was crude in the extreme, and he had never seen it in practice applied to a boat. It was described as a friction clutch, but, as illustrated, it was evidently only an ordinary male and female jaw clutch. He could well imagine what the shock would be when thrown into gear at full speed ahead, with a propeller running at, say 300 revolutions per minute, to say nothing of wear and tear. Again, the continuously revolving gear wheels would be, in his opinion, a constant source of trouble and annoyance, while, owing to the fact that (having regard to the necessarily small diameter of the wheels) the whole driving strain was transmitted from the driver to the driven at one point of the circumference only, great wear and tear and loss of power would result. He tried a similar arrangement of wheels many years ago, fitted with friction (not solid) clutches, but discarded it as utterly unsuitable for its purpose. The essential points of an efficient reversing gear of this class for marine work were:—

1. The working strain should be transmitted from the driver to the driven at two diametrically opposite points of their circumference, so that all lateral strain might be removed from the shafts and bearings.

Mr S. Griffin.

2. The wheels should be locked together during forward running, there being no movement of the transmitting or idle wheels on their axis; the whole combination acting virtually as a solid clutch.

3. The motion should be transmitted by means of adjustable friction clutches, which should be of considerably larger diameter than the wheels themselves, thus allowing the power to be transmitted without undue strain on the friction rings.

His firm had recently introduced a new reversing gear embodying the above points, which worked well in practice, and they were at present making an oil engine of 120 H.P. fitted with this system for the Junin Railway Co., Chili. With regard to the system of reversing the engine itself, he had given considerable attention to such an arrangement, but had long since abandoned it as being far too complicated and uncertain in practice, to say nothing of the cost of the installation. A good system of reversing clutch mechanism was, in his opinion, infinitely more simple and reliable. Such an engine did not even reverse in the generally accepted meaning of the term It was dependable on a working medium altogether outside its own legitimate fuel, and whether this medium was compressed air or burnt gases, the conditions were the same; the energy of the engine must be continually drawn upon to maintain it. During a succession of quick and continuous reversals, such as were often necessary in crowded water-ways, he fancied the engine would have some difficulty in maintaining an efficient pressure in the reservoir, and if not maintained: What would happen? Again, the question of leaking off during any considerable period of inactivity was one of vital importance, as had too often been experienced with this system, even when employed in stationary work for starting only. It was all very well in expert hands when new and in good condition, but the rough and tumble duty of daily continuous work had to be considered, with unskilled attendance, etc. It was under such conditions that the true test had to be taken. And, after all, even assuming that a successfully reversing

engine had been made at the expense of complication and delicacy: What was the practical gain? A well designed and constructed reversing gear was simple, comparatively cheap, easily understood by any ordinary mechanic, and was perfectly adapted to every shade of manœuvre which the boat might be called upon to perform; while as far as the transmission of power was concerned, it was certainly equal to every requirement. The friction clutch employed on the "Royal Daylight" was only 20 inches in diameter, and although nominally transmitting at full load only 45 H.P., it was capable of transmitting at 240 revolutions per minute (the normal speed of the engine) no less than 130 B.H.P. as tested by a dynamometer. The clutch which his firm were applying to 120 H.P. marine engines was of 24 inches outside diameter, and capable of easily transmitting 300 H.P. at the above speed. For similar reasons he should certainly take exception to the employment of electrical transmission. Its first cost would be very high. Then there was the question of the employment of two distinct motors and the consequent degradation of power (probably some 30 per cent.) between the prime mover and the propeller, while to be efficient high speeds must be employed. This meant that either a further reducing gear must be introduced between the motor and the propeller, or the latter must be run at a very high speed with the further loss and disadvantage of cavitation and centrifugal displacement—and all this just to obtain a ready means of reversing the propeller, for the question of flexibility must certainly be left out of the reckoning. The half-speed gear of the oil motor, together with a slight slip of the friction rings, when desired, was all that was necessary to give a perfect graduation of speed from dead slow up to full speed ahead or astern, every possible movement being instantly and with dead certainty effected by a hand-wheel, which could be fixed at any convenient point on deck or below. For the continuous work of ordinary full speed running, direct coupling of the propeller with the engine was, of course, desirable, any intermediary, such as dynamo, motor, etc., being only so much added complication and loss of efficiency.

Mr C. A. Matthey.

Mr C. A. MATTHEY (Member) considered that Mr Kennedy had stated his case very clearly and very fairly. He agreed with Mr Kennedy that the first three systems mentioned in the paper were only applicable to small craft. The fourth was quite feasible, though one grudged the loss of power in the two electric transformations. Still, it might very well be that the superior economy of the power-gas engine over the steam engine would more than outweigh the loss in the dynamo and motor. The fifth plan, that of water jet propulsion, was, in his opinion, the most promising of all. This system had never had a fair trial, and the subject was very generally entirely misunderstood. The jet itself as a propeller was equal or superior to the screw; the poor figure that jet propelled vessels had hitherto cut was due to the means of producing the jet. It was quite true that the larger the column of water thrown astern the greater, *cæteris paribus*, would be the efficiency; but it did not follow that for an equal efficiency with the screw the area of jet should be anything approaching the area of the screw disc; because there were losses in connection with the screw which had no existence in the jet. Mr Kennedy said:—"In Ruthven's 'Waterwitch,' built in 1867, the area of the jets combined was 6·28 square feet, equal to $\frac{1}{53}$ of the midship section of the vessel, and the efficiency was 0·18. In Thornycroft's hydraulic vessel, built in 1883, the area of the jets combined was about one square foot, equal to $\frac{1}{14}$ of the midship section, and the efficiency was 0·254." If this meant, as it appeared to mean, that Mr Kennedy attributed the superior net coefficient of the Thornycroft vessel to the fact that the jet area was a larger fraction of the midship section, the reasoning was entirely fallacious. In the case of the "Waterwitch" the speed of the ship was 15·5 feet per second, and that of the jet, relative to still water, was 13·5 feet per second; the efficiency was therefore 0·695. In Thornycroft's vessel the speed of the vessel was 21 feet and that of the jet 16·2 feet per second, the efficiency being 0·72. There was, therefore, little to choose between the two

vessels on this head. The advantage the Thornycroft vessel had over the "Waterwitch" was in the manner of taking the water into the ship: in the former the speed of the water, relative to the ship, as it entered the intake was conserved, in the latter it was destroyed and had to be reimparted at the expense of the engine. The reason that the jet area had to be so large in the former was that the vessel was being propelled at an extremely disadvantageous speed, having regard to her length. To get an approximate idea as to the size of jet required in merchant ships, take an imaginary case, that of a tramp steamer steaming at 10 knots, say 17 feet per second, with 1000 I.H.P., the beam being about 40 feet and draught loaded 20 feet. The net efficiency of the machinery probably did not exceed Froude's original figure of 0·4, so that the thrust or reaction of the jet would be

$$\frac{33{,}000 \times 400 \text{ H.P.}}{1020 \text{ ft. per minute}} = 13{,}000 \text{ lbs.}$$

Assuming the "slip" or real sternward speed of jet as being equal to the speed of ship, which gave an efficiency of two-thirds, the quantity of water dealt with per second would be found thus, calling W the weight of that water:—

$$\frac{W \times 17}{32} = 13{,}000 \text{ lbs.}$$

so

$$W = \frac{32 \times 13{,}000}{17}$$

the volume of this water, taking sea water at 64 lbs. per cubic foot, would be

$$\frac{32 + 13{,}000}{17 \times 64}$$

and the area of intake (facing forwards as in the Thornycroft vessel) such that the water would enter it without disturbance, would be

$$\frac{13{,}000}{17 \times 17 \times 2} = 22{\cdot}5 \text{ square feet.}$$

Mr C. A. Matthey.

The area of jet would be one-half of this, because the speed of the jet was twice the speed of the ship. Therefore such a ship would be propelled by two jets of about 32 inches diameter; and if there were two pumps with horizontal shafts standing athwartship, each pump taking water from two intakes, one on each side, the four intakes would also be 32 inches in diameter, or an equivalent rectangle. That did not seem very formidable. Such a ship would require a screw propeller some 16 or 17 feet in diameter; and he thought it was the mental image of such a large screw which had led to so much misconception of the subject of jet propulsion. Taking the midship section at 800 square feet, and the area of a 16 feet screw disc at 200 feet, there was a proportion of 1 to 4; while with the jet the proportion was 1 to 71. A juster comparison would be to take the area of intake, instead of area of jet, and compare it with the area of the screw disc; because in both systems that gave the section of the column of water entering the propelling instrument. The jet produced by the screw was of smaller section than the screw disc, there being a sort of *vena contracta* behind the screw. But even on that basis, the column treated by the screw was nearly nine times greater than that dealt with by the jet. And the efficiency was the same in both. In the above example of the jet the efficiency was 0·666, while Mr Sydney Barnaby, in his book on marine propellers, gave the efficiency of the screw as varying from 0·63 in bad examples to 0·69 in the best. It would be seen from the above calculation of the area of jet that, so long as the slip was kept the same as the speed of ship, which gave an efficiency about equal to that of the screw, the area of jet in square feet was equal to the thrust, or resistance of the ship in pounds, divided by four times the square of the speed of the ship in feet per second. Although, however, the efficiency of the jet itself could be easily made equal to that of the screw, it seemed hopeless to attempt to defeat the screw with the jet in smooth water and with the ship in her best trim, the motive power being the same in each case; because, to arrive at the net efficiency, or tow-line horse power

divided by I.H.P., there were in the case of the jet three factors to be multiplied together—namely, the efficiency of engine, that of pump, and that of jet; while in the case of the screw there was only two—namely, that of engine and that of screw. Froude had given from 37 to 40 per cent. only as the net efficiency of screw machinery; and though that was doubtless true of the ships observed by that masterly investigator, things had changed very much since his time. The "friction of load," for instance, which figured in Froude's researches, seemed to have no existence in modern engines. Not long ago Sir William White had given 50 per cent. as a fair estimate of the efficiency of the machinery in the navy, the form, size, and position of screws being the outcome of tank trials; but quite recently he (Mr Matthey) had been informed by Messrs. William Denny & Bros. that 50 per cent. had been considerably surpassed. The net efficiency with the jet would probably be from 40 to 44 per cent., which meant that the combined efficiency of engine and pump would be 0·66. There were firms, whose names would at once occur to members, which would guarantee that performance; and, the efficiency of the jet itself being 0·66, the net efficiency would be 0·44. Perhaps there would be a further deduction on account of friction in the pipes and bends, but even if that amounted to 10 per cent of the whole, which seemed unlikely, the net efficiency would be 40 per cent., which was as good as that of a large number of tramp steamers still working. While, therefore, a jet-propelled vessel could hold her own against these, she would be defeated by a new ship constructed in the light of tank experiments. If the modern screw ship steamed 10 knots, the jet-propelled ship with the same indicated power would probably go about 9 knots. In rough water, however, or in light trim, the speeds might be equal: while the security from breakage of shafts, and the fact that the jet-propelled ship could sail well, would justify a shipowner in very seriously considering whether on the whole the jet was not the better system. And when it came to comparing a steam-propelled screw ship with a gas-propelled jet ship (for that really was the question), the advantage seemed to be entirely on the side of the jet. The

Mr C. A. Matthey.

triple-expansion steam engine consumed about one-and-a-half pounds of coal per horse power per hour, and the gas engine about three-quarters of a pound; so, supposing that with similar ships the jet required more power than the screw, for equal speeds, in the ratio of three to four, the jet ship would still only consume two-thirds of the coal burned by the other. He would venture to criticise Mr Kennedy's method of computing the reaction of jets. In connection with Fig. 7, Mr Kennedy said:—"In this simple arrangement the propulsion would be at A, due to suction; at C, due to the reaction of the steam, plus that due to the momentum of the water flowing away through B, outside of the vessel." Mr Kennedy was counting his chickens twice over. There was one, and one only, safe method of estimating reactions, and that was by calculating the momentum of the stress sent astern. Any other method was beset by pitfalls. If it were desired to split hairs and distinguish between the water (in Fig. 7) which had entered by the intake and that which came from the condensed steam, then it must be taken into account that the intake water had had impressed upon it a speed which was the speed of jet (relative to ship) minus the speed of ship, while the condensed steam had had imparted the whole speed of the jet. As an example of the pitfalls to which he had referred, he would take Mr Kennedy's estimate of the thrust of a jet of one square foot, the water issuing at 40 feet per second, and the speed of the ship being 20 feet per second. Mr Kennedy said the thrust was equal to the area of the throat multiplied by the water pressure, and arrived at 1440 lbs. as the thrust. According to his (Mr Matthey's) rule given above, that the area in feet was equal to the thrust divided by four times the speed of the ship in feet per second, the thrust was 1600 lbs. But the pitfall did not lie in this discrepancy, which was due to Mr Kennedy taking fresh water instead of salt, as he had a perfect right to do, and had made a rough estimate of 10 lbs pressure for a head 24·8 feet, as he also had a perfect right to do. So his estimate of the thrust was right; but this was only by a fluke, because the speed of the ship happened to be one-half

the speed of jet in this instance. If the ship were placed with her stem against a quay wall, and the water made to issue at 40 feet per second, the reaction of the jet, or pressure of the stem against the wall, would be *twice*, not *once*, the area of jet multiplied by the static pressure necessary to impart that velocity. If the ship were now allowed to move forward at any speed, say $\frac{1}{n}$th that of the jet, the thrust would be diminished in the ratio

$$1 \text{ to } 1 - \frac{1}{n}\text{th}.$$

Thus if the speed of the ship were 10 feet per second, the thrust would be three-quarters of twice the static pressure; if the speed were 20 feet per second, as assumed by Mr Kennedy, the thrust would be one-half of twice the static pressure, *i.e.*, it would be equal to it. At a speed of ship of 40 feet per second the thrust would be *nil*. As to reducing the weight of water carried in the ship, by making the speed through the ship greater than the jet velocity, and diminishing it before the nozzle was reached, he did not think that was consistent with economy. In all the modern centrifugal pumps which had given high efficiencies the speed of water entering the eye of the pump was very moderate, say 8 or 10 feet per second; and, of course, the friction in the pipes was less, the less the speed. He had a few months ago patented an arrangement which was exactly the contrary of Mr Kennedy's; he placed a tapering or Venturi pipe between the intake and the eye of the pump, so that the speed with which the water entered the intake was gradually diminished, and was only 10 feet or so per second when it reached the eye of the pump. He also made the pipe leading from the pump to the nozzle larger than the intake, only reducing it by a gradual taper as the nozzle was approached. The penalty to be paid was, of course, the greater weight of water carried, and the larger and heavier pump and engine; but he thought it was worth while in view of the greater efficiency obtained. To see how it came out in practice, one might take the case of the ten-knot tramp steamer already considered, having

Mr P. F. Maccallum.

four intakes, each of 32 inches diameter, and two jets of the same size. The eyes of the centrifugal pumps, for the speed to be 10 feet per second, would be, say 42 inches in diameter, the fans about 7 feet in diameter, and the casings from 12 to 14 feet in diameter. He thought that bulk and weight of machinery was not prohibitive. He presumed Mr Kennedy contemplated taking the gas producer to sea, although he had not gone into that part of the question. No doubt modifications would have to be made in the producer plant to fit it to the new conditions, but he was quite sure that any difficulties that arose could be overcome. Before closing his remarks he could not refrain from alluding once more to the two historical jet-propelled vessels already discussed. The net efficiency of the "Waterwitch" was only 0·18. The work done by the pump was, taking 11,650 pounds of water per second, at rest relatively to the pump, and impressing on it a velocity of 29 feet per second. That was 278 water B.P., the I.H.P. being 760; therefore the efficiency of engine and pump combined was 0·365. Again, with respect to the loss from the faulty mode of receiving the water into the ship; omitting constants, the power actually spent might be expressed by the square of 29, while all that was needed, if the speed of approach had been conserved, was the difference between the square of 29 and the square of 15·5, so the power spent was greater than it need have been in the ratio of 600 to 840. If, then, this ship had had a proper intake, while retaining her wasteful pump, her net efficiency would have risen from 0·18 to 0·252; and if, further, the pump had been replaced by one of a combined efficiency (pump and engine) of 0·66, instead of 0·365, the efficiency would have been no less than 0·46, a figure probably greater than that of any screw ship afloat at that time. The Thornycroft vessel lost nothing at the intake, but the combined efficiency of pump and engine was even worse than that of the "Waterwitch," being 0·355. Had this been 0·66, the net efficiency would have been 0·466.

Mr P. F. MACCALLUM (Member) considered that in the discussion of a paper dealing with internal combustion engines and jet

propulsion, which, as Mr Kennedy said, had perhaps been prematurely condemned, it might be of some interest to recall a mode of ship propulsion patented by the writer in 1886, combining in one apparatus the internal combustion engine and the water jet propeller, the arrangement being shown in Fig. 15. The feed intake C faced forward, and when the vessel was in motion the water

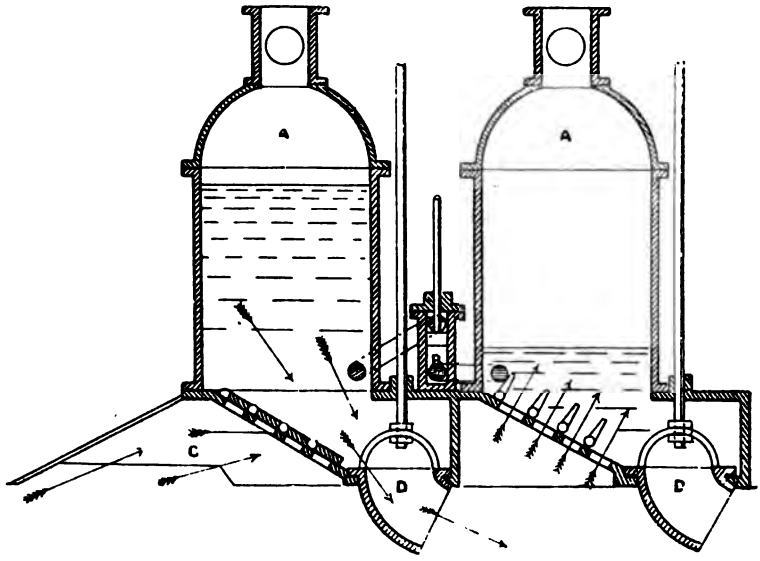

Fig. 15.

passed in a fairly constant stream to one or other of the two large cylinders, A, A. The momentum of the feed in the cylinder which was being filled was utilized in compressing a volume of air into which, at about the instant of greatest compression, a charge of liquid or solid pulverised fuel was injected and ignited. The resultant combustion and expansion drove the water out through the nozzle D while the other cylinder was being filled,

Mr R. T. Napier.
and so on. The removal of the combustion products was facilitated by a scavenging charge of air or by a steam jet. The nozzles, D, D, might be operated from the deck, and turned in any desired direction. The small hydraulic engine P, received a reciprocating motion from the explosions in the large cylinders, and might be used to drive a fan or air pump. The apparatus was only tried on a very small scale, but the action was obviously of the most direct kind possible. Recent trials of Herr Vogt's fluid piston engine pointed to the probability of a very high thermodynamic efficiency in this type of engine.

Mr R. T. NAPIER (Member) observed that the author was enamoured of jet propellers, and that the unsatisfactory results which had attended past attempts to use them were attributed by him to inefficiency in the pumping machinery used, and lack of ideas on the part of the designers. The facts of the case with regard to the "Waterwitch" and the Thorneycroft boat might as well be restated. Shortly after the close of the American war of secession the British Admiralty placed in hands the design for an armoured gun-boat, suitable for passing locks on a certain canal. The length was limited to 162 feet, and the necessary displacement was obtained by making the beam 32 feet. The speed aimed at was 9 knots, and three vessels were built. They were clearly of such a character as to require extravagant power to drive them. Through the influence of friends of Mr Ruthven, one of the three vessels was placed at his disposal so that he might design machinery for jet propulsion. The other two vessels were fitted with twin screws. On trial the "Viper"—a twin screw vessel—steamed 9·58 knots with 696 I.H.P.; the "Waterwitch" came next with 9·3 knots and rather more power; while the "Vixen"—also a twin screw steamer—did worse than either. This was not bad for the jet propeller, but later experience showed that the "Viper" turned a circle in half the time required by the "Waterwitch"; and further that the latter vessel, in rough weather, lost most of her propelling power, and had to be assisted. From this trial the Admiralty decided that the jet was not a rival to the screw pro-

peller, and this decision was endorsed by marine engineers generally. The Thorneycroft boat was built as an experiment by the Admiralty—through the recommendation of a committee on ship design—to see if the jet could be substituted for the screw in cases where the latter would be liable to foul or would be otherwise objectionable. The boat was 66 feet 4 inches long by 7 feet 6 inches beam; being made just so much longer than a torpedo boat as to carry the extra weight of the pumping machinery. On trial the jet propelled boat, with engines indicating 167 H.P., ran at 12·6 knots; a speed which the competing screw boat attained with 70 I H.P., the highest speed of the latter, while indicating 170 H.P., being 17·3 knots. Mr Kennedy took exception to the efficiency of the engines and the centrifugal pumps. As the engines were not tested by brake, and as there was no ground for supposing that they were less efficient than those of the screw boat, Mr Barnaby's assumption of an efficiency of ·77 might be accepted. On the trial the jets delivered, when the vessel was running, 2210 lbs. of water per second at a velocity of 37·2 feet per second. The formula $\frac{WV^2}{\frac{2g}{550}}$ gave, with the above figures, 86·5 water H.P. $\frac{\text{Water H.P.}}{\text{Indicated H.P.}} = \frac{86{\cdot}5}{167} = 52$ per cent. total efficiency, on the assumption that the pumps did all the work; but Mr Barnaby assumed that the pumps received water at the velocity due to the boat's motion, and passed this on without loss. According to his calculation the water H.P. added by the pumps was only 58, or as nearly as might be, the same as the observed H.P. in the jets when driven while the boat was moored. As the water inlet was a scoop, designed solely with a view to admitting water while the boat was running, and evidently not the most suitable for use in a stationery pump; and as efficiency in transmitting energy should be considered as well as efficiency in imparting additional energy; the above method of accounting was not fair to

Mr R. T. Napier.

the pumps. If the work done by the pumps were taken as a mean between the water H.P. in the jets with the boat moored, and when running free, then the total efficiency would be $\frac{72}{167} = \cdot 43$.

Messrs. Drysdale & Co., the well known makers of centrifugal pumps, kindly advised that a pump with the size of fan as in the Thorneycroft boat, and delivering a like quantity of water at a like velocity, should, in an ordinary land installation, have an efficiency of ·7. Taking this value, and Mr Barnaby's assumption of ·77 for the engines, the power to give 72 water H.P., in the jets would be $\frac{72}{\cdot 7 \times \cdot 77}$ or 134 I.H.P. With an engine efficiency of ·85, this could be reduced to 121 I.H.P. The screw boat would do the same work with 70 I.H.P., or 58 per cent. of the amount. The author said: "The vessel can be propelled by the suction of the pump as well as by the pressure." In the Thorneycroft boat the water entered the inlet at a velocity of 1·9 feet per second greater than the velocity of the boat. This was a suction of negligible amount; the object of the designers being clearly to just avoid pressure. It would be open to the designer of the next jet propelled vessel to get—subject to atmospheric conditions—any desired amount of suction, and that by the simple device of restricting the water inlet. Probably a few days after the trial he would dock the boat and increase the area of the inlet to something proportionate to that in the boat which had just been considered. There was no promise in the jet propeller for use in any case where a screw propeller was possible, and, as the Thorneycroft boat would hardly go astern at all, and refused altogether to steer when going to the extent she did, there seemed little scope for the system. The true solution to the problem of adopting the internal combustion engine to marine purposes admittedly lay in producing a workable engine which would reverse. With all the brain power now being devoted to this end, such an engine should yet be realised.

Mr KENNEDY, in answer to the observations of Mr Murray and

Mr Kennedy.

Mr Griffin, said he would point out that the clutch question was not made much of in the paper. The clutch illustrated was perhaps not the best reversible clutch, in fact he knew it was not so. It was to the method and not to the means for carrying it out that he wished to direct attention. The Hele-Shaw clutch, as a clutch for reversing and regulating speed, left little to be desired; but still the dependance upon a clutch system was one which marine engineers would consider a very weak spot in the transmission of power. Hele-Shaw clutches had been designed up to 1,000 horse power. As to the internal combustion engine, the motor-car type of engine might satisfy the amateur and the sporting marine engineer, but few practical marine engineers would care to risk going to sea with a four-cycle engine, with all its vital parts inaccessible and bound up out of sight. The marine internal combustion engine, for serious business, would certainly not follow the practice of motor car design or construction. If it were not to be a turbine, it would be an engine differing not much in appearance and design from a vertical marine compound steam engine, with two double-acting cylinders giving four impulses per revolution to the crank shaft. This was necessary to bring the engine within reasonable weight and size, and also to avoid the necessity for a heavy fly-wheel. Figs. 16 and 17 (Plate XI.) showed a design for a marine internal combustion engine, It was constructed much on the same lines as the Korting horizontal engine, many of which, up to 2,000 horse power, were in use every day. The engine shown was designed for 1,000 horse power, at a speed of 150 revolutions per minute. It differed from the Korting in having a steam boiler through which the exhaust gases were drawn by a gas exhauster, so that there was actually no exhaust valve on the engine. The suction of the gas exhauster also drew in the fresh charge of fuel and air to be compressed and fired again. Engines like these worked quiet and smoothly, the compression of the charge at each end of the cylinder acted as a cushion at the reversal of the motion, and so did away with the knocking common in uncushioned engines. There were two

Mr Kennedy.
cranks at right angles, and the engine was started by steam from the small boiler utilising the waste heat of the producer gases and exhaust gases, so that there was no difficulty whatever in working the ship—stopping, starting, and reversing, or going at half, or quarter speed. The waste heat, however, was not available for steaming when starting with everything cold; but this difficulty was overcome by constructing the steam boiler so that it could be fired by coal for a start, and afterwards, when the engine and producers were at work the heat from the engine exhaust might be utilised. The same boiler blew in the air and steam for the producer, and worked the gas exhauster by jet injectors and ejectors. This combination was as near as possible the gas marine engine plant at the present moment. The engine could be, of course, single acting, in which case four cylinders on two pairs of cranks at right angles were used, giving an even turning moment. Only a small fly-wheel effort was necessary. He had collected a considerable amount of information regarding internal combustion engines and gas producers suitable for marine propulsion for practical commercial purposes, and, with the permission of the Institution, he proposed to embody it in a separate paper, apart from the question of the propeller. For mercantile or naval purposes, petrol or oil engines were not worth considering; the only fuel possible was coal in a gas producer; anthracite for small powers up to 250 or 300 horse power, and common non-caking bituminous slack coal for higher powers. The alarm felt in some quarters about the rapid consumption of steam coal of high quality was, therefore, groundless, for it would be unnecessary to use this high-class steam coal in any ship gas driven. The common slack would be equally as good as the best Welsh steam coal, and the ship would be smokeless. However, neither the clutches nor the engines formed the main theme of the paper. Taking all things into account, the question really was whether the screw propeller, which required the introduction of clutches or electric transmission, could not with advantage be superseded by the water jet propeller, thus doing away with two weak spots in screw propulsion, namely, the

propeller outside the vessel, and the propeller shaft inside the vessel. Mr Matthey's remarks were confined to the real question, namely, whether a screw propeller with a reversing device or a reversing engine should be used, or a jet propeller with an unreversible engine. If the jet propeller could not in practice be brought into agreement with theory, the gas engine with a screw propeller still would offer advantages over the steam engine. The question, he trusted, had been interesting, and Mr Matthey had advanced the knowledge of the jet propeller by his brief contribution to the subject. He was glad to find that Mr Matthey was rather inclined to favour the jet propeller, and assumed that he (Mr Kennedy) would use gas producers at sea instead of boilers; that was quite correct. The engine just briefly alluded to was designed specially to draw its fuel gas from a producer working on the suction principle. Mr Matthey seemed to differ in his calculations of the thrust of a water jet from the method he (Mr Kennedy) employed. In both cases the result was the same. Mr Matthey started from the weight of water accelerated and the acceleration given to it. He preferred to take the static pressure given to the water by the impeller or fan of the centrifugal, and his statement, that the thrust was equal to the area of the throat multiplied by the static pressure due to the velocity or acceleration impressed on the column of water by the impeller, as Mr Matthey pointed out, should have been—"The thrust was equal to the area of the throat multiplied by twice the static pressure equivalent to the slip velocity." Theoretically that might be correct, but in practice it could only be obtained when the intake was so arranged that the water entered freely without change of motion, and would be nearly accomplished in practice by drawing in from the bow of the vessel, but that was not practicable. In his example the slip was 20 feet per second, hence $20 \times 2 = 40$, and $\frac{40^2}{64} = 24$ feet head, or 10 lbs. pressure per square inch, and similarly any other thrust could be calculated for any other slip. Experi-

Mr Kennedy.

ments, however, were required to elucidate the effects of different intakes, and also to settle finally whether his system of placing the throat near the pump, and using a diverging discharge pipe, or Mr Matthey's system of using converging pipes, and placing the discharge throat right astern, was the better plan. The question: Where does the thrust act? must be considered. It acted by pressure on the pump casing or pump delivery pipe. Hence he placed the throats on an extension of the pump delivery with the necessary valves, and arranged the thrust to act fore and aft opposite the throats, the water then passed away through the diverging pipe, and issued finally at a velocity not much greater than that due to the vessel's speed. Then its final efflux velocity would be nearly zero compared with still water outside, when it actually left the vessel. To Mr Macallum's contribution on the subject, he might say that the method proposed in his specification had been carefully considered before, and a boat, working upon the same principles, but employing steam, was built in Germany from designs by Dr Fleischer, regarding which vessel no results were published. The difficulty in applying gas explosion or combustion on this principle was that of the necessity for working at a very low pressure in the cylinders. This pressure was calculated to be the pressure of the head of water required to give the jet the correct velocity. Thus, if the vessel were moored, and the jet velocity 40 feet per second, the head would be $\frac{V^2}{2g}$ or a pressure of about 10 lbs. per square inch; and this pressure, multiplied by the area of the discharge-nozzle, would give the thrust, as in the case of a Barker's mill water turbine. If the pressure were such that the resulting velocity was much greater than twice the velocity of the ship, the efficiency would fall off exactly as it did in a reaction turbine wheel of the Hero or Barker's mill type, in which the angular velocity of the wheel orifice must be a large fraction of the velocity of the outflowing water.* The jet propeller in a ship was simply a modification of

* See Professor Rankine's "Steam Engine and Prime Movers," pages 197, 199, and 206.

Hero's or Barker's jet turbine, and must obey the same laws, and, if properly designed, would give the same efficiency, which, in the case of the turbine, was certainly very high if the speeds were properly chosen. It was difficult to burn the gases in an apparatus like Mr Macallum's, at a sufficiently low and steady pressure, to get efficiency. He had considered it here fully, as it threw some light on his ideas of jet propellers which, after all, should be treated more from the reaction turbine jet point of view. Mr R. T. Napier's standpoint on the question of the jet propeller was the common one, for the reasons given at length in his remarks. The quoted results of jet propelled boats were generally well known; but instances of failures, in engineering schemes and inventions, which afterwards turn out successful, had not been uncommon in the past. The early steam turbines all failed to compete with reciprocating engines, but, nevertheless, the turbine had superseded the piston engine at last. Similarly with the jet propeller, if treated from a static pressure point of view, as in the case of the water jet turbine of the Hero type, very different results would be obtained from those recorded in the previous attempts to work them by simply whirling the water off the blades of a fan, and out of the ship at a high velocity. Mr Napier made a mistake in saying that any amount of suction could be obtained by simply contracting the intake. The suction per square inch of intake area could be so increased, but as the total suction P, equalled the suction S per square inch multiplied by the area of intake A, then $P = S \times A$. But S decreased as A increased and *vice versa*, therefore it was not possible to "get any desired amount of suction" by restricting the intake. Referring to the tests on the Ruthven and on the Thorneycroft jet ships, which were always quoted as conclusive proofs of the inefficiency of jet propulsion, he ventured to question their value in that respect, as no scientific tests were ever made. The only attempt at a test was that recorded by Mr S. W. Barnaby, who measured by a proof plane (a small metal sheet $1\frac{5}{16}''$ square inserted in the jet, and hung on a balance) the pressure

Mr Kennedy.
of efflux at the nozzle outlet in Thorneycroft's vessel, and thereby found the final quantity and velocity of the water after all losses had occurred. For his purpose that result was sufficient. In investigating the whole question, the method he (Mr Kennedy) had adopted was to use pressure guages on the centrifugal casing, on the valve chambers, and on pipes, right up to the outlet. Only by actually measuring the fall of pressure and noting the direction could any real information be obtained of the design of the jet propeller. This had never been done in any tests recorded, and the results of the previous attempts could not by any means be regarded as conclusive scientific proofs one way or another. Fig. 18, showed the idea of measurement. In this system there were two pressures. The centrifugal pressure, which would be recorded on the gauge shown, if all outlet for the water were closed and the centrifugal run at normal speed, and the working pressure. By opening the nozzle N the pressure would fall in the pump case, and generally the fall of pressure in working pumps was allowed to be about 25 per cent. of the centrifugal pressure, the remaining pressure was working pressure. In the diagram shown the water escaped directly by the expanding pipe, so that no further gauging was necessary; but if valves and bends intervened then gauge pressure readings must be made to find the fall of pressure due to them. It seemed to him that to get the best results, the centrifugal pressure, the working pressure, and the power delivered to the pump, should bear some relation to each other which ought to be ascertained in order to get the best effect. Also that the location of the thrust might be as near to the pump as possible. The subsequent ejection of the water could be effected without loss. The relative values of the working pressure and centrifugal pressures could be varied by using various sized nozzles. The speed of the water passing the nozzle should not exceed twice the speed of the vessel; this fixed the working pressure and centrifugal pressure. Calculations based upon the results of failure were not of much value, unless the cause of the failure could be ascertained. It was surprising that no notice had

been taken of the result of an actual test of a De Laval turbine pump giving one horse power in the water jet for 31 lbs. of steam per hour, as stated in the paper, This was equal to a jet of 1·4 cubic feet of water per second, at a velocity of 20 feet per second. For 31 lbs. of steam consumed per hour the area of the jet in inches per horse power would be $\frac{1·4}{20} = ·07$ square feet, or 10 square inches. The pressure due to this velocity of 20 feet per second was 2·7 pounds per square inch, giving a thrust of $2 \times 10 \times 2·7 = 54$ lbs. with efficiency of jet unity: but if the jet efficiency was only ·07, the actual thrust would be 37·8 lbs. With a consumption of 15,000 lbs. of steam per hour the thrust would, therefore, be about 18,000 lbs. The De Laval turbine pump would, so far as these calculations showed, make an excellent marine engine with a jet propeller. The steam turbine had given steam power a prolonged supremacy that would not now be doubted, but in the end internal combustion engines must prevail, either as turbines or piston engines. He had no special preference for the jet propeller, but believed it would in many cases be adopted, and he hoped to demonstrate his views in some practical shape on a sufficiently large scale to prove its capabilities. If for no other reason than the facility of using cheap coal instead of special steam coal on board a ship, and that without smoke. The subject of ship propulsion by gas producers and engines was of great commercial and scientific importance, whatever propeller might be used. He trusted that his somewhat imperfect and incomplete paper might have had some effect in directing attention to a subject yet in its infancy.

On the motion of the Chairman (Mr E. Hall-Brown, Vice-President) Mr Rankin Kennedy was awarded a vote of thanks for his paper.

AN INQUIRY REGARDING THE MARINE PROPELLER.

By J. Millen Adam (Member).

SEE PLATES IX. AND X.

Read 22nd December, 1903.

An endeavour is made in the following paper to concentrate attention on the propeller and the fluid which passes through it, as a conservative system in the sense indicated by an illustration from the art of ropemaking.

To form the strands of a hempen cable many yarns converge to pass through a fixed block, from which the resultant strand emerges a rotating cylinder; on the other hand, in laying a wire rope it is the wire spools which rotate within the machine while the strand recedes without rotation. The result, however, is similar, all motion being relative. Incidentally it is to be noted for future reference that the dynamic grasp of the block on a plane at right angles to motion is essential to the result.

For our present purpose, therefore, let us consider a rotating column of water and its impact on the propeller, or *vice versa* without reference to the surrounding element, or in other words the term "rotation" will be used in its relation only to the propeller and its column as defined, and energy and inertia will be used as convertible terms.

Some elementary observations are made to explain the point of view of the succeeding inquiry into the reactions produced in a fluid by and upon a rotating screw, which may be defined as an instrument to produce axial acceleration of a homogeneous current passing through its disc, distinct from the surrounding element, and to receive from that acceleration corresponding reaction.

Much misconception and confusion of thought may arise from

failing to discriminate between the substance of the water and its contained energy or relative inertia.

The theory that "The action of the propeller on the water is principally to accumulate pressure, which has the effect of increasing the velocity of the race after contact with the blade surfaces has ceased," is rejected for the following reasons, which to this audience will be merely mentioned, not elaborated:—

1st. Ten atmospheres on the volume of a steam boiler under test fails when released to spill the volume of a pint measure. Therefore, in free water, movement must be simultaneous with pressure.

2nd. Although the apparent movement of a body of water is relatively slow, the transmission of energy by impact, through water, may be instantaneous. Such impact is probably conveyed to the nearest free surface, and there dissipated in vibratory or undulating motion, and partly in the production of heat, *e.g.*, the difference between the air on the pressure side and on the suction side of centrifugal fans is measurable by an ordinary thermometer.

In a tank of still water, having a pipe from a force pump some distance under and directed towards the surface, the surge due to a stroke of the pump piston, however sharp, will not disturb the surface for a measurable time, but tap the outside of the tank with a hammer, and instantly, in places over the whole surface the light will be seen to shimmer.

The Helical Screw Propeller.

The last-named fact indicates a thin and sharp-edged blade to avoid loss by percussion, as the angular velocity of tip is frequently about 100 feet per second. Given a blade of proper form, the water would never be called upon to follow up that angular velocity, but only the axial velocity of acceleration of the stream,

which velocity seldom exceeds 6 feet per second* ; so that unless a powerful centrifugal-pump action exists no cavitation should occur in practice.

No propulsive power can be expended on the so-called "race," forward of the propeller, as water is supplied in full measure, and therefore in full weight by gravitation, and the instant such is not supplied, there occurs rupture of the column. In this respect, and perhaps in this only, does the behaviour of water in relation to a propeller differ from air, which, within a suction pipe, rarifies as it approaches—the speed gradually increasing to carry the same mass within the time. The whole mass of water contained in a pipe of given section must take simultaneous acceleration, and to depict the natural movement the area of the cylinder, F^1 Fig. 1, afterwards described, would be constricted slightly just above the propeller.

Let a piston, Fig. 1, lift water from P to Q, it is evident that the whole work is represented by the weight of the column P Q, expressed in terms of speed. There is no work done by the piston upon the feed column F, whose pressure upon the under side of the piston is not less, and is opposite to, the atmospheric pressure upon the surface within the cylinder at Q. In event of the pipe F being obstructed, and failing to supply a column of sufficient speed or height, then will the work of the piston be instantly increased by the whole atmospheric pressure acting on Q, and uncompensated at F save by the elastic pressure of the vapour of water at the given temperature. This is the case of cavitation.

Since this paper was handed to the Secretary, the writer has seen, by courtesy of the latter, an article published in "Traction and Transmission," part 30, which explains the manner of producing the very interesting and beautiful photographs and the cavitation effects therein depicted, which illustrations were first

* 30 knots = 56 feet per second, of which about 10 per cent. is momentarily contributed by the screw, viz., what is called slip.

published in the Transactions of this Institution three years ago (Vol. 44, Plate 4) in connection with Hon. C. A. Parson's paper on the steam turbine. These explanations go to show that these photographs depict what does *not* occur in marine practice.

Mr Dunell, the writer of that article, says:—"Mr Parsons, in order to get certain data on the subject, made some very interesting and ingenious experiments. Model screws, which were made to revolve with great rapidity, were placed in a bath of water brought to a temperature just short of boiling point. The immersion of the screw was proportionate to that of an actual working screw propeller. The ratio of depth beneath the surface of the water was a necessary factor in the experiment. . . . A close resemblance in these respects to the actual working conditions of the screw being thus obtained, Mr Parsons proceeded to show the phenomenon that occurred."

Regarding this revelation, three observations may be made:—1st. Although a propeller is occasionally required to start from rest, its real work cannot be imitated by creating a current in still water. 2nd. The true hydraulic effect could not be studied with a *ratio* of depth beneath the surface unless the factor taken were the angular velocity. It is improbable that this is the ratio meant, and the point ceases to be of any real consequence in view of the fact:—3rd. That the experiments were made at such a temperature that the elastic pressure of the water vapour entirely neutralised the atmospheric pressure equivalent to 30 feet immersion.

It may be assumed that all attempts had failed to produce cavitation of that kind in cold water.

A high authority on the marine propeller has said, in discussing the value of blades having gaining pitch:—"It is probable that the water will look after this for itself, and will refuse to be accelerated suddenly; *and all that is required of the screw is that its surface shall accommodate itself to the rate of the flow through it, which rate is determined by the mean pitch of the screw surface.* What the variation on each side of the mean should be is very

difficult to say, as it has not yet been determined at what distance ahead of the screw acceleration of the water commences, or at what distance astern it is completed, and the full velocity of the race attained."

The above rather confusing quotation—part of which has been italicised by the present writer—clearly indicates the difficulty of lucid reasoning upon the screw propeller. It is not an instrument of precision but only of approximations.

The italicised dictum might read: "The water is *compelled* to look after this for itself in refusing to be accelerated suddenly, for all that the helical screw is capable of is that its surface shall approximate to the mean rate of the flow, etc."

These approximations will be more fully referred to later.

The usually accepted diagram of the *vena contracta* type of race, Fig. 2—which is taken from a standard work—is much exaggerated, for the difference between the feed and the effluent cannot exceed the proportion of a 10-inch to a 9-inch pipe. What is of more importance is that it appears to be quite wrong in indicating a definite axial acceleration of the race forward of the propeller. Hydraulic pressure bears equally in every direction, and therefore the entire forward hemisphere is moved to contribute to the zone of reduced pressure, as shown in Fig. 3; and—taking the converse analogy of the action of a mushroom valve in which the area of a pipe is vented by a peripheral opening one-fourth of its diameter—the bulk of the extra water required would naturally be supplied by inflow on the plane of the disc. A flame test with the model on the table illustrates this movement very clearly—this propeller creating no radial dispersion—radial dispersion might be expected to counteract this movement, and ultimately cause cavitation by restricting the natural supply, but such cavitation would not start at the tips, as indicated by Mr Parson's photographs.

A screw rotating in running water without gripping it, is analagous to a disc rotating in still water, or to our piston in Fig. 1 standing idle.

If the evolution be followed, then the piston might be raised and its work accomplished by making a screw thread on the piston rod and rotating it in a fixed nut, and similarly the same work might be done by modifying the piston itself into a screw. The latter form would be appropriate in the case illustrated to the right of the figure, where it is required, not to raise still water, but to accelerate a stream. Let $\frac{P}{P^1}$ have head sufficient to yield 100 gallons per minute by gravitation, the screw piston being independently rotated at 100 revolutions per minute without "grip" neither impelling nor retarding. If increase in delivery be required, then a screw of 10 per cent. coarser pitch might be chosen, with 109 gallons as the result, 1 gallon being lost by leakage or true slip of the water. The 10 per cent. extra pitch—not the full pitch of the screw—is thus seen to represent the stroke of our typical piston, and it includes a variable allowance for slip. Again, if it is required instead of increasing the quantity, to raise 100 gallons of water to a level 10 units higher, Q^1, the first propeller might now be appropriate with 101 revolutions per minute, the reduction of the head and the extra revolution providing the necessary angle of incidence to perform the work, $P^1 Q^1$, as before. The screw is therefore a piston, whose stroke or lift is not described by its "pitch," P, but by the subtense of the angle P O Q, its angle of incidence in Fig. 4. As already noted, there is leakage or slip of the water escaping between the blades and otherwise, the screw being like the piston, really intermittent in action blade by blade. The analogous losses in the case of the piston are in two directions—the loss on the return stroke and that due to leakage through the piston rings. "Grip," therefore, cannot be wholly dissociated in fact from its attendant slip, but the distinction between grip and slip should never be lost sight of mentally.

The problem of the propeller to the marine engineer is—having fixed a type—to determine in each case a relationship of speed, diameter, pitch, and surface best suited to minimise leakage through and around the propeller.

The primary aim of the present paper is to inquire whether the existing type is well calculated to make this problem easy, or this object attainable, and to propose an improved type, for reasons given in the text.

Applied to a ship, the difference between the travel of the screw in relation to the wake in which the propeller is found and the speed of the ship, provides the angle of incidence, P O Q, Fig. 4, without which no energy would be usefully employed. Let a ship be towed at a uniform speed, having her screw rotated—without gripping the water either to propel or retard—by a motor designed for constant speed at any power. If the tow-rope be cast off, her speed will fall away until the angle of incidence on the propeller blades develops just enough resistance to drive her at a uniform speed somewhat less than the first. The term slip, applied to the quantity so defined, tends to mislead. That quantity might more aptly be called "grip," which includes, as we have seen, a percentage of leakage. When a ship is retarded by head winds this angle may become excessive, with leakage to correspond, and to run the propeller more slowly would actually increase its efficiency. There is to be determined then for every screw a highest efficiency angle of mean incidence, irrespective of its gross pitch, and experimental research devoted to this narrow field would yield valuable results. In the helical screw the whole "grip" is taken immediately by the leading edge, where the particles in proximity to the face are retarded and robbed of all relative kinetic energy before being shed from the following edge. In his paper on ship resistance Mr R. E. Froude has described this action, although not in the same connection. This inert fluid—accumulating to some extent—would give the effect of a coarser pitch to the active stream, by producing practically a false reactive surface. If this be so it would account for so-called negative slip. Observation of the behaviour of water towards a boulder in mid-stream will show that the actual work of getting past the obstruction is at a definite small distance from the stone. A small pebble seems to make a bigger relative

disturbance than a larger one. The absolute thickness of inert fluid does not vary much, and—by inference—any variation in pitch so caused would be more pronounced on a model, or near the tips, or over a finely pitched propeller.

Having noted some of the physical features involved, the geometry of the screw propeller in relation thereto, may now be considered.

A particle or mass escaping from the impact of a narrow inclined vane—moving uniformly in a straight line at right angles to its length—will take, according to Newton's second law, a straight line with a direction due to the angle of incidence in relation to its movement before contact, the change indicating the resultant direction of the oblique force The change is opposed by resistances which may be resolved into two component forces, A, Fig. 4, at right angles to the path of the vane, represented in reaction by deflection (or effective work for our present purpose) and B parallel to the path represented by inertia, or what has been erroneously called useless resistance. By taking account of the length of the vane a conception might be formed of two planes of force characterised as above, constant in magnitude and direction.

Fig. 5 is an attempt at a delineation of this extended figure of forces in perspective, the tip of the vane being depicted as receding at an angle of 45° from the plane of the paper. This is merely to connect the idea to Fig. 6, where the vane is shown inclined edgewise at 45°. Let the vane be pivoted on one end and the free end moved through an arc, the component plane A now lies parallel to the axis of rotation and perpendicular to the plane of the diagram, and the component B now becomes a system of tangential forces of magnitude, falling to *nil* at the axis. The simple system of A and B resistances fails to satisfy the conditions, and a new component, D, Fig. 7, in the same plane as B, is introduced, for, to compel a mass to describe a curved path, C, it must be acted on by a force directed towards the centre of the curvature. If this resistance, D, is supplied by matter outside the system as defined, then is energy being expended beyond the reactive

column, and therefore wasted so far as propulsion is concerned, whereas no power would be absorbed by this necessary centripetal component were it contained within the system—if, in other words, the form of the propeller itself supplied it. Such a vane, however, does not form a segment of a screw; to make it so it must be twisted, Fig. 7, in such a manner that every angle of incidence from root to tip shall be so co-related to its radius as to form a consistent pitch. This twisting further modifies the diagram of forces, and increases the magnitude of the component D, because every arc traversing the surface of the vane is now bounded by an arc of lesser gradient, offering a path of reduced resistance. The effect will be graphically shown by Figs. 8 and 9. Fig. 8 is the contour of an ordinary propeller blade upon a helix of uniform pitch, and Fig. 9 is a projected view of the same. Let stream K take a tangential path across the blade, then it is to be proved that the gradient is no longer a straight line, but a convex mound of rapidly losing pitch. In Fig. 10 the horizontal base of each rectangle is the developed length of an arc of 15°, and the vertical spaces are the axial travel or pitch advance within the same angles of rotation, then the pitch angle of the blade, or the gradient the water has to climb, is indicated by the hypothenuse—a diagonal straight line passing through their intersections; but a tangent struck from the first radial in Fig. 9 and subtending the same angle is longer than the corresponding arc. The dotted verticals denote the augmented base, and their intersections with the pitch lines define the dotted convex curve T, which graphically expresses the loss of resistance at once resulting from and inviting radial dispersion.

Mr S. W. Barnaby points out that no dispersal of water is visible in phosphorescent seas, but, as has been already stated, energy is transmitted by concussion as surely as by translation, and the phosphorescent visibility may be limited to the latter disturbance. Although the substance of the water of the race may not disperse much, because there is nothing to take its place, an instantaneous deflection or tendency to deflect is all that must be shown to prove

loss of energy, for propulsive thrust is upon the propeller face and nowhere else, and the direction of the resistances bearing thereon is of primary importance. The behaviour of the water afterwards is notable only as indicating work already done, and the turbulent wake is an evidence of misdirected energy.

In the discussion of one of this year's papers, read by Mr Yarrow before the Institution of Naval Architects, the following observations were made by Mr Rigg:—"A curved propeller looks very well theoretically, but is wrong in practice; a flat blade gives the better result of the two; the movement of a stream of water on the blade of a screw propeller is not a sliding action, but like that of a billiard ball against the cushion. It is a reflected action, and the effect of it is that the resultant pressure is always perpendicular to the surface of the blade."

The above has already been answered by anticipation. Recalling the distinction between substance and quality, the duty of the propeller is to abstract the energy and to get rid of the water. Did water condense, as steam does in the act of delivering up its energy to the De Laval turbine, the problem would be different, but it subsists and has to be disposed of, and this disposal may be accomplished economically or the reverse. This depends on the shape of the propeller blade—the shape not of its outline, but of its surface. In other words, the treatment of the water by the propeller should not presuppose instant deflection like a billiard ball, but a gradual though rapid change of momentum and direction, and an ideal blade must in its form follow the change and bear with constant and equal pressure upon the fleeting fluid in transit over its surface.

When waves roll on sand or shelving rocks at low angles, they immediately break in impotent foam, but on several places on our coasts, owing to a different formation of rock, the water with similar impulse is deflected in an almost unbroken column high into the air at right angles to the impulse.

A little consideration leads us to deduce that the form of surface most favourable to the latter result is a curve, Fig. 11,

whose lower tangent is parallel to the attack, rising on vertical equidistant ordinates, whose successive lengths are as the squares of the abscissae values, giving, in fact, equal acceleration, at right angles to the force, in unit of time.

Attempts to adopt gaining pitches have not been successful, probably because the radial component D, Fig. 7. is thereby further increased, and also because an acceleration, uniform from tip to boss, is not possible in the helical vane, in which by construction the tip subtends a much smaller angle of rotation than the root.

This will readily be seen with reference to Figs. 8 and 9, in which the radii divide the screw ribband or path into spaces, each representing 15° of rotation. Now, in a propeller of gaining pitch, each of these equal spaces would contain an equal amount of gain, say 6 inches. If 10 feet mean pitch were required, let the blade have a pitch of 10 feet on its medial line marked 150° on the diagram. It would then be 10 feet 6 inches pitch at 135°, and 9 feet 6 inches pitch at 165°. Then, by construction, the stream line K, which comes into contact with the blade at 175° and leaves about 125°, is accelerated from 9 feet 2 inches pitch on entering, to 10 feet 10 inches pitch on leaving, viz., 20 inches gain of pitch; while stream N would escape with but half that gain, viz., 10 inches, as it only gets contact at 162°, and is discharged at 138°. Now, a chief object aimed at is to enter the water without shock, and we can get an approximation only to that ideal here also if, choosing an intermediate stream, M is to enter the water with precision, Fig. 12, then the tip would not enter without shock, and, on the other hand, near the root, the blade would offer a positive obstruction to the water passing through the propeller where the angle of incidence would actually fall on the reverse side of the leading edge. It is not surprising, therefore, that the consensus of opinion among practical men is that a flat blade gives better results.

It may now be taken as demonstrated, geometrically and physically, that non-gaining pitch is *an essential feature* of the helical screw.

The Conic Propeller.

Let an immersed hollow cone, Fig. 13, be rotated on its own axis. It is obvious that no energy will be expended beyond overcoming skin friction. It is an idle piston. But let the cone be divided, and on the plane of division let the axis of rotation be inclined to the cone axis, crossing it at the apex; let the apogee be the leading edge, and a reactive surface will emerge having several remarkable features. The potential pitch ratio increases as the angle of inclination until the perigee edge approaches the shaft axis; yet the apogee or leading edge remains through every "phase" *nil* pitch, having a tangent which is common to an arc of gyration.

By paring away the apogee edge, any required pitch of leading edge or of angle of incidence may be found, and measuring along any generating line of the cone the magnitude of the pitch is proportional to the distance from the apex.

Figs. 13 and 14 are side and end elevations of such a half-cone with the locus of a possible working propeller blade, indicated in black. Fig. 14 has on the right-hand side the half-cone repeated in its elliptic aspect only for clearness, and to assist a demonstration which shall follow. Fig. 16 is the same conic surface developed; and Fig. 15 is the "pitch" angle diagram for the same figure, the construction of which does not differ materially from that of a helical screw. The pitch angle diagram of a helical screw is usually defined as the hypothenuse of a right angled triangle, whose sides are respectively the length of the pitch of the screw, and $2\pi r$. It can also be described as the development of a hollow cylinder of the given diameter, where it is intersected by the screw thread, and it is a straight line, Fig. 10. Fig. 15 shows, in contrast, the peculiar curve which characterises the conic pitch-angle line. Each of these curves is, similarly, the intersection of a concentric cylinder with the surface of an inclined cone, and they appear J.K.L., &c., in all the Figures. They denote the path of a fluid particle in transit from apogee to perigee upon any vane of this geometric form, and it is to be proved that such is the path and no

other. If the inevitable path of the fluid is properly so defined, then will the thrust be wholly and purely parallel to the axis.

Stream J shows a complete cycle from apogee 180° to perigee 0°, and is seen to be a symmetrical curve reaching a maximum potential near the perigee, where it reverts and falls back to zero. The locus of the maximum potential pitch, which falls about the 45° generating line on this phase, is common to every stream, and will form the nominal root of every blade. Any propeller boss must, therefore, reach it or enclose it.

Stream K on the same Figure, which is shown from apogee to this point or line of osculation and no further, will be found to correspond closely with Fig. 11, the ideal curve already described giving equal acceleration per angle of rotation, or, what is the same thing, equal acceleration per unit of time. As every pitch curve is identical in form, differing only in scale of magnitude, a fluid moved by a vane of this form is homogeneous in direction, and equal in pressure over the whole surface in contact.

The most remarkable feature, however, of the relationship of these respective pitch curves is that every arc is bounded on its outer edge by an arc, whose gradient or angle of incidence is much higher, so that the path of least resistance to a fluid escaping from the impact of this vane is not tangential as in the screw, but strongly centripetal.

In Fig. 13, three equidistant planes, *alpha*, *beta*, and *gamma*, are represented by cutting the figure at right angles to the axis of rotation. On the right of Fig. 14 the intersections of these planes, with the cone, are plotted as ellipses. Let the spaces between these planes represent units of work, viz.—in the concrete, to carry a volume axially from *alpha* to *beta*, or the same volume from *beta* to *gamma* in unit of time, or, what in this case is the same thing, in unit of angular movement.

From the axis in Fig. 14, produce two radials, the first R to the intersection of the stream L with *alpha*, and the second *r* to its intersection with *beta*; the angle formed is the time unit. Now, to describe the pitch angle as before, let the length of the arc

be the base of a right angle, the pitch advance, *alpha-beta*, be the height, and the reactive surface along the stream-line will represent the hypothenuse or gradient to be scaled. Now, assume a tangential escape from the point R. The line T is seen to diverge, and long before it subtends the same angle it approaches and passes the plane *beta*, thus completing its first unit of work, and invades the plane *gamma*.

The increase of gradient thus demanded by a tangential escape in the cone and phase depicted is, in fact, about 15 per cent. If the pitch angle at a given diameter were 1 in 10, the path of a tangential escape across a blade would be about 1 in 8·5. In fact, tangential escape at any practical angular velocity is impossible. This empirical tangent is also plotted in relation to the same stream L in Fig. 13, and for a more graphic comparison is developed in Fig. 15, L, where the magnitude of the increase of gradient implied by a tangential escape is made manifest, L being the pitch curve for the arc, and T for the tangent.

Every one, of course, has observed the curious irruptions at the surface of the water in the wake of a screw propeller, as if rotating eddies of water were being constantly made and spurned from the blades, these vortices, of course, are being thrown off on all sides, downwards and sideways as well as upwards, presumably in the general form of an expanding cone or the unwinding of a spiral from the receding propeller. It is here contended that this phenomenon is due to the radial component of every angle of incidence of the screw surface already geometrically demonstrated. It was to be expected therefore that the centripetal component of the conic vane which replaces it would extirpate the turbulent wake, and this is in fact the case. On two trials of the steam yacht "Greta" with conic propellers carried out by the courtesy of the late Col. John Scott, C.B., of Halkshill, this expectation was realised. The vessel's wake was quite like that of a ship under sail.

Experiments with air currents indicate the same effect, and demonstrate particularly that the induction is equally strong near

the tips, and that there are practically no reverse currents or short-circuiting. The approaching converging currents flow apparently equally through the disc, and recede as a very slightly attenuated and vortex-like column.

The only real analogy in nature to the marine propeller is the bird's wing when the quills are closed on the downward stroke, and it appears to have been designed on a conoidal basis. So far as a limited observation goes, a cone with much more obtuse generating angle is used, and the "phase" is probably variable, but the inclined cone and the position of the wing in relation to the apogee edge are similar to that shown in the figures.

On Fig. 15 in M is plotted the curve from apogee to the locus of a vane or blade proportional to the cone illustrated, and the proposed section of a blade is attached. The reverse is shown parallel to the obverse, but washed away to a fine leading edge from the reverse, and to a following edge on the obverse.

Such a blade must be narrow owing to its rapid acceleration, and the leading edge should be at or under the apparent pitch of the entering water. The forward body is filled with water at high relative velocity to be retarded and yield its energy toward and upon the following edge, becoming inert and leaving the blade with minimum momentum in relation to still water.

To sum up—A conic vane seems to possess as distinctive and native features, several advantages separately aimed at in various modifications and distortions of the helix, viz—

1st A gaining pitch yielding equal acceleration in unit of time.

2nd Equal acceleration between nearly parallel edges giving constant width from root to tip.

3rd A constant centripetal component on every angle of incidence from tip to root.

4th Great flexibility of design without deviation from type, the generating angle as well as the phase of inclination from the axis of rotation being variable, and

5th Those elements once determined and tabulated—a great simplicity of all other calculations, owing to the geometrical purity of the figure and that its surface is developable.

The curves in Fig. 15, were determined by projecting the actual sections on the paper and finding the pitch of the tangents with an ordinary pitch scale.

Mr R. E. Froude kindly pointed out a more elegant mode for the "Determination of pitch on the proposition that the generating lines of the cone must be loci of uniform pitch ratio—The pitch ratio for each generating angle can be expressed algebraically in terms of the angle of cone, angle of inclination of cone to shaft axis, and angle of generation. The distances along the generating lines from the apex to points of given radial distance from the shaft, are also expressible mathematically in similar terms and then the pitch is given by the pitch ratio into the radius."

This done, for any cone and phase, the results can be tabulated for easy reference. Foundry work need not differ much from ordinary practice. To mould a ship propeller in loam, the mould may be swept up by a rod guided over the corresponding surface of a small cone fixed in position at the apex, and shifted round into position for each blade. Where patterns must be used these may be accurately and cheaply formed by cutting a thin metal sheet or sheets to the proper shape for one or both faces, curving them to position upon a rigid cone and using it or them for facing, filling up thereupon the required thickness with any plastic material.

Discussion.

Mr John Riekie (Member) remarked that the author stated in the opening sentence of his paper that an endeavour was made to concentrate attention on the propeller and fluid which passed through it. He was of opinion that the great waste in power in marine engines was entirely due to the designing of propellers so that the water might pass freely through the blades. The author

Mr John Riekie.

also referred to the manufacture of a hempen cable and a wire rope where the block and machine were fixed. It was only necessary to assume a case where the block and machine with spool could be made to partly recede from the cable and the wire rope while undergoing manufacture, to illustrate the waste of power in steamship propulsion. The experiment, carried out at the previous meeting, with a small propeller appeared to him to clearly demonstrate that this waste was entirely due to centripetal action, and pointed to the necessity of dividing the propellers into two classes, namely, one where the air or fluid was forced away from the propeller, and the other where the propeller was forced through the fluid. Centripetal action was desirable in a fan, but for a marine propeller it was the very reverse of what was wanted. Every endeavour should be made in a marine propeller to get the blade to grip the water, and so allow a minimum flow of water to pass through it. In fact, water should take the place of the block and machine with spool, so that the maximum of efficiency could be had from the marine engine. Not only did centripetal action in a marine propeller convert it into an efficient force pump, to force the water away from the stern of the vessel, and so do wasteful work whilst putting it in motion, but it was the sole cause of cavitation, which was so detrimental to high speed after the vessel had got into motion. Centripetal action and its concomitant evil, cavitation, appeared to him to be entirely due to placing the propeller blades in the same plane. The obvious remedy, therefore, would be to place each blade in a separate plane. This arrangement, if adopted, would be following in the footsteps of Nature, which provided fish with only one tail to work in undisturbed water at all speeds. There was a point in connection with the propeller which he failed to understand, and that was the necessity of providing a variable pitch. So far as he could understand there should be only one standard pitch, and that the coarsest possible at all times. If the blades were placed at 90 degrees to the line of shafting they would act as a disc and have no resistance to force the vessel

ahead. On the other hand when placed at 180 degrees there would again be no tendency to produce forward motion. The mean of these should therefore be the correct pitch, and anything less would reduce the propulsive effect.

Mr R. T. Napier (Member) said that the main object of the screw propeller proposed by the author was to direct the whole column of water right aft. The patent records abounded with specifications of propellers designed to this same end, and it was strange if the simple geometric surface now proposed had not already been tried. There was, some thirty years ago, a fancy for propellers of this nature, but, so far as he was aware, few with driving faces other than helical were now made. "Expanding pitch" was quite a seperate matter and could be got quite easily with a helical surface. A propeller with the blades curving aft, whatever might be claimed for it for driving the ship ahead, was a bad propeller for going astern; a fact which, no doubt accounted partly for the existing preference for radial blades.

Mr Ebenezer Hall-Brown (Vice-President), desired to thank Mr Adam for his paper, to which he had listened with very great pleasure. He also wished to express his admiration for the novel manner in which Mr Adam had designed a propeller of increasing pitch. The question of screw propellers had always been and would always continue to be a very fascinating one. Although previous attempts to produce a propeller with axially increasing pitch had not proved very successful, he hardly thought that was a sufficient reason for dismissing any proposal without careful consideration, more especially when the proposal took such a novel form as Mr Adam's, and evinced an amount of study and forethought as this one did. While he had thought very highly of the matter in the paper, he had found considerable difficulty in following Mr Adam's language. That might be, and no doubt was, due to the fact that Mr Adam was so familiar with his subject that he went on instinctively from beginning to end without taking the intermediate steps, and consequently when anyone endeavoured to follow him at a fair distance the difficulties were

somewhat great. If Mr Adam again favoured the Institution with a paper, he would ask him not to put forward such posers as the term "dynamic grasp" and that terrible flight of jumps on page 136 where he said "the whole work is represented by the weight of the column P Q, expressed in terms of speed." He had no doubt that Mr Adam's ideas were absolutely clear, but these phrases conveyed nothing whatever to him. Dealing with the subject matter of the paper he differed from the writer at the start, and consequently all through. He felt that the whole paper was based on Fig. 1, which, for the purpose of studying the action of a screw propeller was, he thought, a most unhappy one. As far as he could understand, Mr Adam seemed to think that the whole of the work done by the piston in the cylinder F, in a given time, might be measured by the weight of the column P Q, multiplied into the distance through which the piston moved in that time. He wished to emphasise the fact that that was only part of the work which was being done, and it was the part which did not in the slightest degree resemble the work done by a screw propeller. Mr Adam had neglected to consider the work required to cause the water to enter the cylinder at F. In other words the water had no tendency to move there, and would not move but for the fact that the piston was moving, and if the piston was in a state of uniform motion, then the water from the main vessel was being accelerated through the opening at F. That acceleration was not caused by gravity. Gravity did nothing for nothing. The acceleration was caused by the motion of the piston, and a corresponding pressure must be exerted on the piston to produce the acceleration, this was in addition to the pressure due to the head P Q. This might be more clearly seen if, first of all, the piston was considered to be at rest; the pressure on its upper side would then exactly balance that on the under side. When however, the piston moved, the pressure on the under side must be reduced, otherwise the state of equilibrium which previously existed would not be disturbed, and no flow of water would take place. The reduction of pressure on the under side was of course

equivalent to added pressure on the upper side. This additional pressure required to accelerate the water entering a pump, was usually a small matter in comparison to the work done in the actual lifting of the water, and was therefore usually neglected. The evidence of the work done was the accumulated energy in the moving water. This became proportionately greater when the speed of discharge was great relatively to the height of lift; and in the case of the screw propeller where there was no lift, it was the cause of the whole expenditure of energy, neglecting, of course, friction. This would be seen more clearly from Fig. 17, where the cylinder F_1 F_2 was shown immersed in the

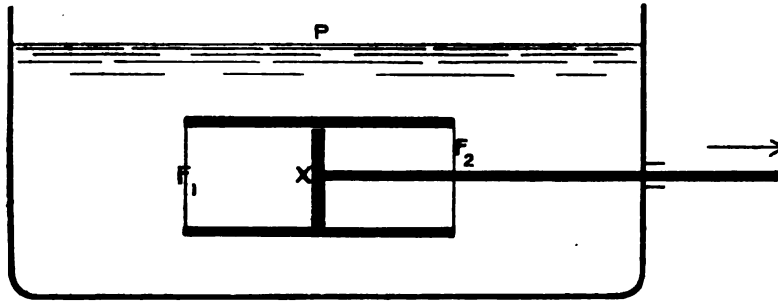

Fig. 17.

vessel P, the latter being of relatively large size, when compared with the cylinder. In this case it was quite clear that when the piston moved with uniform velocity, the whole of the water in the cylinder was also caused to move with uniform velocity, consequently no work was done upon the water while in the cylinder, the whole of the work accumulated in the water in the cylinder F_1F_2, was imparted to it before it entered at F_1. In other words, the water was accelerated before it entered at F_1, that was, before it touched the piston X. It would also be the case if the piston X were replaced by a screw propeller revolving at a uniform velocity. The water would still pass through the cylinder with uniform velocity, the whole of which had been imparted to it before it touched the propeller, the action of the

propeller being simply to drive the water through the tube at a uniform rate. This would be true however short the tube was, and consequently when the tube was infinitely short, the action would be precisely the same. His contention then was that the propeller should be capable of dealing with water in uniform motion, water which had been accelerated from a zero speed to practically the speed of the propeller before it came into contact with the propeller, and that only a screw of uniform or true helical pitch could deal with such a stream with maximum efficiency. This was a point upon which Mr Adam and he would not agree. He understood Mr Adam's contention to be that the leading edge of the propeller blades should have a pitch corresponding to "no slip," while the pitch of the following edge should be increased by an amount corresponding to the real slip of the propeller. In other words, that the speed of the water passing through the propeller should be increased while in contact with the propeller, by the amount of real slip. He would endeavour to show that that was impossible. In this connection he had to point out that Mr Adam's statement, that the slip seldom exceeded 6 feet per second was an under-estimate, and seemed to refer to apparent slip only. The real slip might, and often would be much greater than that, and would very seldom be less than 20 per cent. of the speed of the propeller, indeed it might easily amount to 30 per cent. or 40 per cent. Assuming an apparent slip of propeller of 10 per cent. with a real slip of 20 per cent. in a vessel of 20 knots speed. That would be a very moderate allowance for slip, and at the speed named it amounted to 6·75 feet per second. Assuming further that the engine made 80 revolutions per minute, and the arc subtended by each propeller blade was one sixteenth of the circumference, then the time in which a particle of water would cross one of the blades was $\frac{1}{16}$ of $\frac{60}{80}$ of one second, or $\frac{3}{64}$ of one second. In that time the water had imparted to it a real slip of 6·75 feet per second. In other words, an additional velocity of 6·75 feet per second was to be imparted in $\frac{3}{64}$ of a second. That corresponded to an

acceleration of 144 feet per second, an acceleration which it was impossible to imagine the entering water could follow. The result would be the formation of a series of eddies. In other words, the water flowing through the propeller, would take a mean velocity which was somewhat greater than the velocity of the entering edge, and less than the velocity of the following edge. The velocity of the water passing through the propeller would be the mean velocity of the propeller, and the leading edge being under the mean pitch would be a positive obstruction against which the water would dash, while the following edge would have too great a pitch and tend to cause eddies from that cause. As only part of the water passing through the propeller actually came into contact with the blades, it was evident that unless eddies were to be produced the propeller must have a pitch corresponding to the mean velocity of the stream, and this pitch must be uniform or very nearly so. In other words he believed that only a true screw could give maximum efficiency as a propeller. He could not expect that Mr Adam would agree with him, but if he had expressed at all clearly what he meant to say the reasons were perfectly convincing. He had said already that he considered that the acceleration of the race must take place before the water touched the propeller. That was not quite right, but as the length of propeller was short in relation to the pitch, it was practically so: the leading edge ought to have a slightly lesser pitch than the mean pitch. The difference would probably not exceed one per cent. With regard to the diagram which Mr Adam considered so misleading, Fig. 2, he also felt it was misleading because the stream contracted after passing through the propeller. There could be no contraction of the stream after it had passed the propeller. There could be no further work done upon it, and it would tend to diffuse and not to contract.

Mr JOHN G. JOHNSTONE, B.Sc. (Associate Member), said the theory of propellers could be classed under two heads:—Firstly, treating the propeller as a whole; and Secondly, treating an elemental part of the face of the blade as a small plane. The

efficiency could be determined according to either of these two theories. The paper took up the theory of the propeller by treating it as a whole, and he thought the illustration of the rope-making machine was a very good one, inasmuch as the cords or strands which formed the rope, roughly represented the stream line motion in the region of the propeller. The theory on page 135 was, he thought, similar to Rankin's theory. The author rejected that theory for two reasons, but these reasons were insufficient. It was generally acknowledged that Rankin's theory was imperfect, because of the assumption that had to be made regarding the race. The imperfection lay in the assumption that the velocity of the race was equal to the velocity of slip. An interesting point was raised on page 140, when the author said "There is to be determined then for every screw, a highest efficiency angle of mean incidence, irrespective of its gross pitch, and experimental research devoted to this narrow field would yield valuable results." A similar conclusion to that was arrived at by the late Mr Froude, in a paper read before the Institution of Naval Architects on "The relation between slip, pitch, and propulsive efficiency." In that paper an important deduction was made, namely, that for maximum efficiency the pitch angle should be 45° with the line of ship's motion; and that, "If the slip angle exceeds that which gives the maximum efficiency, the pitch angle must also be increased: if the excess be small, the pitch angle must be increased by the same amount; if the excess be large, the increment of the pitch angle must be still greater." He thought that Mr Adam's statement was contained in this deduction of Mr Froude's. He was not quite clear as to the distinction which the author made between "grip" and "slip," and he would like to ask him if he intended leakage to mean slip. He understood slip merely as a velocity obtained by subtracting from the theoretical velocity of the propeller, which was the pitch multiplied by the number of revolutions per minute, the actual speed of the ship. He would like to ask Mr Adam if he could give any other reason than that stated in the

paper for negative slip. In one or two passages the author advocated a gaining pitch, which appeared to be the chief feature of the new propeller. The advantages of the conoidal propeller could probably only be determined by experiment, and it was hardly possible to treat the question theoretically so as to be able to say with certainty that this propeller was more efficient than a propeller with the ordinary shape of blade, or a propeller whose surface was approximately a helix. One disadvantage that occurred to him was that the conoidal propeller would give, in comparison with a helical propeller of the same projected area, a larger developed surface, and therefore there would be a proportionately larger edgewise friction.

Mr ADAM, in reply, said he was not surprised that Mr Napier should think it strange if "the simple geometric surface now proposed had not already been tried." He himself deemed it almost incredible until the German and United States letters patent were sealed. It seemed that it had not before occurred to any one to select a surface by measurement of its pitch ratios from a simple half-cone inclined to its own axis. These simple circumstances formed his preliminary claim to consideration for the design, notwithstanding all that had been done during the last thirty years or more. It was true that "expanding pitch could be got quite readily by distortion of a helical surface." The question was that it was admittedly of no advantage. Perhaps, because of a certain obscurity in the language of the paper that some one else referred to—Mr Napier failed to note that one section of the paper, page 144, was devoted to showing why attempts to adopt gaining pitches had been unsuccessful with the helical screw, because of the absence of properties apparently possessed by the conical surface. He was sorry that nobody had thought it worth while to take up any of these alleged demonstrations of his, and either confirm or confute them on their merits. In that respect he was a good deal disappointed, and it was more difficult to answer that which was implied by silence than anything that had been said. Of the speakers in the discussion on the paper, Mr Riekie, who

Mr Adam.
did him the honour to open the discussion, did not attack any of his propositions. He, however, made some propositions of his own, which he (Mr Adam) was sorry he could not quite comprehend, perhaps because Mr Riekie did not have time to fully develop them. After all, the paper was only a condensation, or rather, a somewhat disconnected *precis* of a more extended argument, which he was now precluded from expanding, because of the inability of the paper to command a critical response from many members interested in this subject. He thanked Mr Hall-Brown, for his whole-hearted and vigorous criticism, and he would almost require to take the black board to reply to him. Mr Hall-Brown chose for his battle ground Fig. 1, and although he would have preferred another, he accepted that with pleasure, but would first make an observation with regard to Fig. 17, illustrating Mr Hall-Brown's remarks. He assumed uniform motion for his piston X, and the whole contents of the cylinder, and deduced that the greater part of the work of the piston moving in the direction of the arrow was expended on the induction side F_1. This would be true of a pump-piston raising water from a well. The condition, however, of the piston X was, that it was subject to hydraulic pressure on both sides equal and opposite, say 20 lbs. per square inch, assuming an immersion of 10 feet. By moving in the direction of the arrow, the piston yielded to the pressure F_1, and opposed the pressure F_2. It, therefore, did mechanical work upon F_2, but no work upon F_1, for if there were no water in F_1 the energy required to move the piston would be greater. He preferred, however, his own Fig. 1, which was merely a subsidiary diagram to illustrate a point of view, but, being of an introductory character, it had apparently attracted more attention than the proper subject matter of the paper. Supposing one did not raise the piston, but drained off the water "Q" above the piston: Did Mr Hall-Brown contend that the water in F would not tend to force the piston up toward the level P? Instead of requiring to borrow energy from the piston, it imparted energy to it. But this was very elementary. How

did it affect the screw? His contention was that the propeller was analagous to a piston, merely modified in form to enable it to deal uniformly with and increase the speed of a current, and that the equivalent of the piston stroke was what was called the true slip, or what he had called the angle of incidence upon the blade surface, P O Q, Fig. 4. The original current was supplied by the speed of the ship, or more correctly by the speed of the wake, relatively to the ship. The energy of the screw was expended on imparting an increased sternward speed on that part of the current which passed through the cross section of its disc, namely, F^1 on Fig. 1, where the speed of the wake was assumed to be 100 gallons per minute, due to the head P P^1, the screw being rotated without assisting or retarding. Let P be a river of constant level, and P^1 a tank gradually filling up to the level Q^1; then to maintain a constant feed of 100 gallons at all levels, there would be no increase of speed in the feed F^1, but an increase of resistance and of energy expended by the screw. That increased energy was entirely represented by the increased head Q^1 P^1, and no part of it upon the feed F^1; and this case was quite analogous to the case given on page 140, namely, that of a propeller gradually accepting the increasing burden of propelling a ship on the tow rope being thrown off. Mr Hall-Brown further objected that an almost instantaneous acceleration which would work out at 144 feet per second if continuous, was impossible. What was the rate of acceleration of a golf ball at the moment of impact? And further: What became of his particle of water if it were not accelerated? It did not go through the blade, and if it eddied round to the back its linear speed must be greatly increased. The publication of such diagrams as Fig. 2 led to misunderstanding of what really happened. An important aim of his paper was to direct attention to the *relative* movement of the propeller parts, and the water. That could best be expressed by a diagram, Fig. 18, similar to the plan view of a row of vanes in Parsons' steam turbine advancing in procession, each interblade stream being very slightly deflected, so that from this point of view the linear

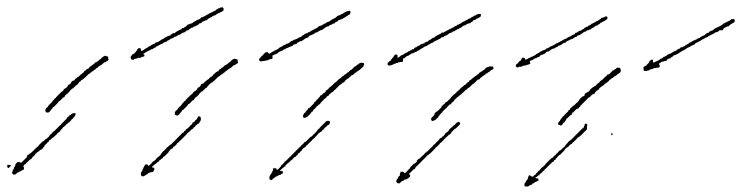

Fig. 18,

acceleration of the whole stream was incidental to a slight angular acceleration of each interblade stream.

Mr HALL-BROWN asked if Mr Adam disputed the actual amount of acceleration he (Mr Hall-Brown) had indicated. His difficulty was with the water which did not come into actual contact with the working face of the propeller. If this water attained the same velocity in the same time, as it must if no cavity were formed, and there was no previous acceleration of the water, then it also must have an acceleration of 144 feet per second per second Such an acceleration could not, so far as he knew, be produced by gravity.

Mr ADAM—Undoubtedly his contention was that the force of gravity performed the work on that side, but he was aware of no record of the speed at which gravity would accelerate free water in vacuo, which was the virtual condition here, because a failure to supply would create a vacuum. The value of surface tension was not known, nor of local attraction at infinitely small distances, all of which forces came into play in the case under review. The suggestion that acceleration took place at some distance away did not explain matters, it only shifted the venue unless elasticity could be claimed for water. There was no divorcing volume and weight in water. There was neither expansion nor contraction. But besides these, the argument based on Fig. 3 was being forgotten. On page 138 it was stated that " Hydraulic pressure bears equally in every direction, and therefore the entire forward hemisphere is moved to contribute

to the zone of reduced pressure." How did this affect the very natural difficulty raised by Mr Hall-Brown? Assume an arc of

Fig. 19,

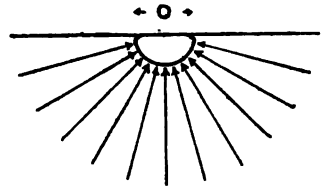

Fig. 20,

vacuo "O," Fig 19, of unit volume, within a closed tube containing water and immersed in water. Let the tube be opened at one end *a*, and the arc will be closed in unit time $\frac{1}{1}$ by hydraulic force acting in a linear direction by gravity, and this was Mr Hall-Brown's assumption. If the tube be opened at both ends, the same force acting in two linear directions would close the arc in half the time. If opened to a full hemisphere of fluid: In what time would it close? This also might be calculable. Fluid filaments converging on a vanishing point, Fig. 20, were conical, not cylindrical, as in the first assumption, and the cubic capacity of a cone being but one-third that of a cylinder of equal base and height, the feed at the base of any cone required to fill it in unit time, would be one-third the velocity required to fill a corresponding cylinder; but opposing cylinders by contributing their quota in *two* directions reduced the feed velocity of each to half the apparent linear escape. Similarly conical filaments converging in *every* direction must effect a similar reduction. On this assumption the actual velocity demanded of each contributing filament around the hemisphere toward "O," Fig. 20, would appear to be $\frac{1}{2} \times \frac{1}{3} = \frac{1}{6}$, and Mr Hall-Brown's 144 feet per second of linear escape would demand $\frac{144}{6} = 24$ feet per second of feed, varying inversely as the square of the distance, for, of course, the water must approach and fill the demand. He only denied that it approached in an axial or any

Mr Adam.

other linear direction. Now factors of Mr Hall-Brown's figures were, tip speed and width of blade at tip, which latter measurement was not very generous, namely, $\frac{1}{16}$ of the circumference of the disc, and could well be increased, if necessary, to avoid cavitation.* He thanked Mr Johnstone for his sympathetic remarks and criticism, and thought a study of Figs. 10 and 15, with the arguments based on them, would remove the fear of increased friction by the adoption of such surfaces. He had described a form of blade which would accomplish the required deflection with the least sudden acceleration, and therefore with least tendency to eddy-making, and which, placing a certain centripetal pressure on the column, treated the whole volume from root to tip as a homogeneous current. Some such form only needed time and experience to be ultimately adopted, although he had almost given up thonght of living to see its general adoption.

The CHAIRMAN (Prof. J. H. Biles LL.D., Vice-President) said that before asking the Members of the Institution to accord a hearty vote of thanks to Mr Millen Adam, he would like to say that there were many of them who had a great interest in the propeller question and it surely would not be very difficult to try a propeller of Mr Adam's design on a small boat, against an ordinary propeller, with a view to obtaining a comparison. He was sure that Mr Adam would find a sympathetic experimenter from some one in the district of Glasgow. He did not happen to have a steam launch at present; otherwise he would have been delighted to place it at Mr Adam's disposal. He proposed a hearty vote of thanks to Mr Adam for the trouble he had taken in putting this paper before them.

The vote of thanks was carried by acclamation.

LECTURE ON RADIUM AND ITS PROPERTIES.

(Synopsis).

By Dr. JOHN MACINTYRE, F.R.S.E.

Read 26th January, 1904.

DR MACINTYRE said he was not quite prepared for the nature of the meeting or the large audience that he saw before him. He had determined to make the lecture somewhat popular, and if, therefore, he did not quite please the more scientific section of the Members present, they must excuse him. As the amount of radium was limited, he was not prepared to show large specimens of its salts. It was exceedingly difficult to show specimens even to a limited number of people, and before such a large audience one was only able to demonstrate the effects of the salts of radium while describing the properties of the same. First of all, he would refer to the state of science at the time radio-activity was discovered. After explaining the difference between things material which could be acted upon by magnetic forces, and others, such as light, which could not be so acted upon, he threw a series of diagrammatic representations of various spectra on the screen showing the relationships of the different rays or waves from electricity, heat, light, and on in succession to the Röntgen rays. Gaps there were in plenty in these diagrams; and great attempts were being made to complete the series. During the past year Blondlot had described the order of waves known as the N rays, which would probably be placed in the gap occurring between the electric and heat waves, and since his discovery Professor Charpentier of Nancy had stated that he had found emanations of rays resembling the Blondlot rays which were emitted from the human body. Without attempting to confirm these statements, Dr Macintyre simply offered them as

an example of what was being done to fill in the gaps in the series which was yet far from complete. Stokes, by his great researches, had, previous to Röntgen's day, explained the meaning of such terms as phosphorescence, and in 1895 the great discovery of the X rays was made. No sooner was this done than men began to ask if similar rays did not exist outside the Crookes' tube, and this was not to be wondered at, because Crookes himself, in his early experiments, had described the conditions inside the tube as being matter in a fourth state, and a world which we would, in all probability, always have to view from the outside. This was not now the case, because since Becquerel's discovery the existence had been made known of emanations resembling the cathodal stream inside the tube and waves comparable in every way, as far as one could see, with the X rays. The history of the discovery began with the experiments of Henri, who found that certain rays which came from zinc sulphide could pass through paper. Becquerel proved that similar rays were obtained from double salts of uranium and potassium, and that these rays were not got by absorption during daylight; therefore, the substances were radio-active. He found that they passed through wood and less dense metals, and discharged an electric condenser with ease. Crookes found that this activity was due to an impurity, not to uranium itself. Monsieur and Madame Curie, beginning at this point, took pitch-blend, which contained many different elements, and they found that after extracting the uranium, something even more active than uranium itself was left behind, which gave all the tests of penetration and the discharge of electric condensers above referred to. By a long process they gradually separated out other substances from pitch-blend, and each time the residue was more radio-active than anything that they had previously extracted. In consequence, polonium and actinium were discovered, and lastly, radium.

Dr Macintyre then showed a number of specimens of the salts of radium from the lowest to the greatest radio-activity at present known. He showed screens fluorescing under their action, and

the passing of the rays through such substances as wood and aluminium. He also showed the discharge of an electric condenser in air, the experiment being demonstrated on the screen by means of the magic lantern. He next described one of the most extraordinary properties yet attributed to radium, namely, the fact that it was constantly giving off heat, and that it was claimed for it that it was able to maintain itself at 1·5 degrees Centigrade above the temperature of surrounding objects. So far, the lecturer said, he had only shown that something was given off radium, and now came the question: What was that something? To begin with, there were certain rays called the *alpha* rays, which might result from particles of helium, weighing probably 1 per cent. of the radium atom, and which travelled at a tremendous velocity, probably 20 million metres per second. They were easily stopped by air or thin paper, and could discharge an electric condenser. They were charged positively, a fact which could be shown by means of a powerful magnet. In the second place, it had been shown that the *beta* rays, a second set, were given off by radium. These rays, which travelled with tremendous velocity, probably 100 million metres per second, were now believed to be the electrons which constituted the cathodal stream in a Crookes' tube. They were possessed of great penetration, were negatively charged, and were easily deflected by a magnet. They also made air a conductor, and their mass was probably one thousandth part of the hydrogen atom. Dr Macintyre here paid a great tribute to the work of Larmor and J. J. Thomson to whom the world was indebted for much that had lately been discovered. In the third place, the *gamma* rays were being given off. Most observers described them as resembling X rays, and they were possibly produced by the *beta* rays striking on parts of the radium itself or on the surrounding objects. They were exceedingly penetrating, much more so than the other two and were not deviable by a magnet. They carried no electrical discharge. The *beta* and *gamma* rays, if the above were correct, had been known before, therefore, the *alpha* rays were the only new ones.

Rutherford and Sody found that radium was constantly giving off something luminous, and that that something could be condensed by liquid air. Helium had been discovered by means of the spectroscope as existing in stellar bodies before it was found on earth; and Ramsay found it in pitch-blend. Ramsay and Sody collected the gases which came from radium, and it was to be noted at this stage that helium was not one of them. Oxygen and hydrogen were removed chemically, and the carbon was frozen out. After watching the process for some time it was discovered that the gas helium made its appearance when examined by the spectroscope. As helium existed in pitch-blend, but not in the radium bromide taken from it, and in as much as it again made its appearance some time afterwards, it led to the conclusion that the radium which was a dense element (for its atomic weight was estimated at at least 225) was splitting up into simpler elements; hence the theory of disintegration. Other substances had since been shown to be undergoing the same process—thorium, for example—and it was not impossible that everything was going through that same process of disintegration. The tendency would thus seem to be a reversion to the old idea of unification of matter. This theory of disintegration had led to all the nonsensical and exaggerated statements about transmutation of metals which had appeared in the press of late, and the realization of the alchemist's dream, that the baser metals could now be changed into the higher, and all the lead in the world into gold. It was one thing to show that dense elements might be split up into simpler ones, and another to reconstruct or change one thing into another.

There was another property, or set of properties, of radium with which he had not yet dealt, namely, the action on living tissues. It possessed the power of stimulation when applied carefully in small quantities and for short periods, but if left in contact with living tissues for a time it produced death. Ten milligrammes of one of the salts placed on the arm, with a layer of mica intervening, had, as the result of one hour's application, resulted in one case in a burn which lasted for four months, and evidently had

permanently destroyed the superficial epithelial structures. Many such burns had been recorded. It caused an excitement in the retina when brought near the forehead, and experiments on small animals, such as mice, had shown that it could produce death. A large quantity of radium would be an exceedingly dangerous thing to approach, and even a comparatively small amount, such as an ounce, if it could be obtained, not to speak of half-a-pound, would be a very dangerous thing to work with. Of course, the amount of radium was exceedingly small at present. Experimenters differed in their views as to the results on the growth of plants, and with respect to the effects of the radium rays on bacteria. This brought him to the surgical question, but on that point he preferred to say nothing. Owing to the exaggerated statements in the papers, too much had been anticipated of what might yet come, and consequently much suffering had been caused by false expectations having been raised in the minds of those afflicted with serious affections. This he could say, however, that radium bromide did possess a therapeutic value, but what the ultimate result would be was for the future.

In conclusion, Dr. Macintyre said that he wished the audience to remember that much of what he had been dealing with that night was speculative. The very statement at the beginning of the lecture about the difference between matter and force might have to be reconsidered in view of recent discoveries, because now that the borderland had been reached where matter and so-called force seemed to merge into each other, it was difficult to say whether a thing possessed mass or not. Further, he was aware that many great authorities were by no means disposed to accept the view of disintegration. Nevertheless, those who had been experimenting most with the salts in question believed the reductions referred to, to be fair and reasonable. The new discoveries were not so important for what they had taught yet as for the possibilities that lay in the future. Many things might have to be reconsidered, such as the age of the sun, the age of the earth, and other questions too numerous to mention; but the most

important change in our ideas was being brought about by this new view of the primal elements. Even twenty-five years ago Clerk-Maxwell believed that the chemist might change a compound salt into some other salt, but that each of the elements was a something definite, fixed, indestructible, and unwearable. The elements were, indeed, the bricks out of which the whole universe was made. It had been shown that atoms were, relatively speaking, very large structures, and that they were composed of much smaller particles which most observers, like J. J. Thomson, Sir Oliver Lodge, and others, believed to be the electrons. A number of these occupied the space of the atom, and by rearranging them and increasing the numbers different elements might be produced. In other words, probably there was only one kind of matter which went to form all atoms. Indeed, it was doubtful, as he had said, if it was matter at all. The idea of building up a universe by a process of evolution was not new to the world. Sir Norman Lockyer had taught this as the result of his observations upon stellar bodies when examining the spectrum of each. To a large extent, of course, this was merely theoretical. Everything in this world pointed to a beginning, a culmination, and then decay, and the same arrangement seemed to be present everywhere in the universe. The story of radium showed that it was not impossible that the so-called process of disintegration was what corresponded to the period of decay. Science had not yet shown the other side of the question, namely, the building up. It was reasonable enough to expect, however, that some day this knowledge would be obtained, and then probably it would be seen that although the building up of a star, its culminating point, and process of decay might take millions upon millions of years, yet, that nothing was at rest, constant change was everywhere present, and finally one might obtain a glimpse of the cycle of events referred to.

The CHAIRMAN (Mr James Gilchrist, Vice-President) said he was surprised at the wonderful story which Dr. Macintyre had unfolded, and he felt sure that those present had been deeply interested in the experiments and explanations which they had

seen and heard. He would ask them to award Dr. Macintyre a hearty vote of thanks for so kindly consenting to give this lecture, and he hoped that Dr. Macintyre would be long spared to carry out his researches with radium.

The vote of thanks was carried by acclamation.

Dr. MACINTYRE, in reply, said he was grateful to the audience for listening to him with such attention. He had a little doubt in his mind as to why he was asked to come and address a body of engineers and shipbuilders, because, although he knew they were scientific men, they were also practical men. He knew that they were all interested in this new source of energy, and it would be impressed upon them when he stated that it had been calculated that 14 lbs. of radium would keep a 50,000 horse-power engine working for a year. That was simply a theoretical statement; but as at present this amount of radium would cost about £1,200,000, and would be rather a dangerous thing to have in a ship, he thought it would be better for engineers to continue to concentrate their thoughts on the economy of coal.

EXPERIMENTS WITH RAPID CUTTING STEEL TOOLS.

By Mr CHARLES DAY (Member).

(SEE PLATE XII.)

Read 23rd February, 1904.

DURING the past two years a series of tests of tool steels has been carried out in Manchester by a committee appointed jointly by the Manchester Association of Engineers and by the Manchester City Council, and as these tests form the most complete investigation yet made into the speeds practicable with the new tool steels, and were made by a quite impartial committee, it is of the first importance that the results obtained, and the lessons to be deduced therefrom should be widely known amongst engineers.

A report giving the whole of the figures relating to the tests has been published by the Manchester Association of Engineers, hence it is hardly necessary to give here every detail, but an abstract is given showing some of the principal results of the tests.

NATURE OF TESTS.

Very careful consideration was given by the joint committee just mentioned to the manner of carrying the tests out, and to the nature of the tests which it was desirable should be made; the primary object being to ascertain what results could be obtained on lathes by means of the new tool steels which have been introduced during the past few years. Bearing in mind the various requirements of engineering shops, it was decided to make trials when taking heavy cuts, also when taking medium and light cuts, and these trials were made on forged steel, and on cast iron of various degrees of hardness.

MATERIAL OPERATED UPON.

The greatest possible care was taken to ensure that each class of material operated upon was uniform in hardness, and hardness tests were made by drilling; particulars of these tests are given in the full report. It can be accepted that the material for each set of tests was of practically uniform hardness.

Three grades of hardness of steel and of cast iron were tested: the soft steel contained 0·2 per cent. of carbon, the medium steel contained 0·3 per cent., and the hard steel contained 0·5 per cent. The cast iron was similarly classified as soft, medium, and hard, and the medium quality may be taken as corresponding to average castings of medium weight.

SIZE OF CUTS.

In all cases a cut was first taken over the surface of the material to remove the skin, and to give a uniform surface, so that the depths of the cuts might be reliably measured. After careful consideration it was decided to make tests with the following depths of cut and traverse :—

	Depth of Cut.	Traverse.
1st, ...	$\frac{3}{8}''$	$\frac{1}{8}''$
2nd, ...	$\frac{3}{16}''$	$\frac{1}{8}''$
3rd, ...	$\frac{3}{16}''$	$\frac{1}{16}''$
4th, ...	$\frac{1}{16}''$	$\frac{1}{16}''$

In regard to the dimensions decided upon for the first test, it may be well to mention here that a greater weight of material might have been removed per minute with a heavier cut than $\frac{3}{8}'' \times \frac{1}{8}''$, but this cut was decided upon as being satisfactorily within the power of the lathe, and as being more likely to give information which could frequently be utilized in ordinary shops than if a heavier cut had been adopted. The other tests were selected as representing conditions often appearing in engineering shops.

Each tool steel maker was invited to state the speeds at which his steel could be tested under the various conditions. This course

was considered to be preferable to that of having the speeds fixed by the committee, as by adopting it, benefit was obtained of the tool steel makers' experience.

DURATION OF TRIALS.

The duration of the trials was as follows :—

Duration of trials of soft steel,	...	20	minutes.	
Do. medium steel,	...	30	do.	
Do. hard steel,	...	30	do.	
Do. soft cast iron,	...	30	do.	
Do. medium cast iron,		30	do.	
Do. hard cast iron,	...	60	do.	for $\frac{3}{16}'' \times \frac{1}{8}''$ cuts.
Do. do.	...	30	do.	for all other cuts.

DESCRIPTION OF LATHE.

The lathe on which all the tests were made was loaned by Messrs Armstrong, Whitworth & Co., and was one of their 15″ centre screw-cutting lathes, taking in 9′ 6″ between the centres, but for these experiments 18″ headstocks were fitted. The fast headstock had both double and treble back gears, the gear ratios being 14·9 to 1 and 42·5 to 1. The headstock was specially fitted with a 3-step cone suitable for a 6″ belt. The lathe was driven by a direct current shunt-wound motor of 120 B.H.P., and a large air-cooled rheostat was connected. The speed of the motor could be varied between 150 and 300 revolutions per minute at no load on the lathe, and from 60 to 300 revolutions with heavy cuts, by means of the rheostat. The lathe was driven by two intermediate countershafts having 10″ belts.

CONDITION OF TOOLS.

After the trials the condition of each tool was carefully examined, and a number indicating the condition was assessed to each tool.

RESULTS.

The full report gives the detailed results of each trial, also

diagrams are given showing the maximum cutting speeds successfully used in each trial, and, in addition, curves are given showing the average speeds during each set of trials. Believing, however, that it would be better to take the average of those tools which finished in fair condition rather than the average of all the tools, the average curves have been re-drawn. Figs. 1 and 2 show the average results obtained from those tools which finished in such condition as to warrant mark 4, or something better, whilst the dotted lines in the figures show the maximum results obtained with any tool which finished in a satisfactory condition.

No single make of steel proved to be superior to all others in every respect, and as it is hardly practicable in engineering shops to have different makes of steel for different cuts and materials, it would appear that the average curves are those which can safely be taken as standards of all round comparison for use in our shops. From the trials, formulæ were deduced to give approximately the cutting speeds which may be adopted for different areas of cut and different materials and curves, but owing to the modifications adopted in preparing the tables and curves for this paper, the writer has found it necessary to re-arrange the formulæ. The following are now suggested:—

For soft steel $S = \frac{1{\cdot}96}{a \times 0{\cdot}013} + 12$

,, med. ,, $S = \frac{1{\cdot}823}{a \times 0{\cdot}015} + 5$

,, hard ,, $S = \frac{1{\cdot}77}{a \times 0{\cdot}027} + 5$

,, soft cast iron $S = \frac{2}{a \times 0{\cdot}02} + 20$

,, med. ,, ,, $S = \frac{1{\cdot}5}{a \times 0{\cdot}23}$

,, hard ,, ,, $S = \frac{1{\cdot}4}{a \times 0{\cdot}35}$

Where S = Cutting speed in feet per minute, and
a = Area of section of cut, *i.e.*, traverse × depth.

Very careful records were taken of the power used at the various cuts and speeds, also data was obtained enabling the force brought to bear on the tools to be determined.

Table I. gives the average results obtained from the tools which finished in a condition warranting mark 4, or better. The figures given for horse power were calculated from the readings of electrical instruments attached to the motor; they, therefore, include the motor losses and countershaft friction. In the full report the figures for net horse power required to overcome the resistance to cutting are given, but as these are mainly required for determining the cutting force on the tool point, they have not been included in the Tables given here.

On the completion of the main series of trials a further set of experiments was carried out to ascertain whether lengthened runs could be made with the new steels at speeds approaching those adopted with the shorter runs. The tests were made on soft forged steel and on medium cast iron. The average of the results obtained from those trials, which maintained their average cutting edge in fair condition for 60 minutes or longer, is given in Table II.

For the purposes of comparing results which may be obtained with the new steels against those obtainable with ordinary Mushet steel and ordinary water-hardened steel, tools made of these materials were also tested, and the average results are given in the Table. It will be noted that the new steels give decidedly improved results, and that with them the cutting speed can be about twice as fast as with ordinary Mushet steel, and three or four times as fast as with ordinary water-hardened steel.

An item of interest which may be mentioned here is that ordinary Mushet steel can be very greatly improved by treating it in the same manner as the new steels when tempering; this is a point of value, as it enables greatly improved results to be obtained from existing tools.

TABLE I. AVERAGE OF RESULTS OBTAINED FROM TOOLS WHICH DID NOT FAIL.

Material operated on.	Intended Cut and Traverse.	Actual Cutting Speed.	Actual Cut.			Area Machined per Min.	Weight removed per Min.	Horse Power at Motor.	Cutting Force on point of Tool.	
			Depth.	Traverse.	Area.				Actual lbs.	Tons per sq. in.
	inches.	ft. per min.	Inches.	inches.	sq. in.	sq. ft.	lbs.			
Soft Steel, ...	1/16 × 1/16	128·4	0·0558	0·0625	0·0035	0·63	1·47	14·24	849	108
„ ...	3/16 × 1/16	95·8	0·167	0·0622	0·0104	0·500	3·42	16·97	2590	111
„ ...	3/16 × 1/8	62·8	0·168	0·125	0·021	0·655	4·383	18·24	5454	116
„ ...	3/8 × 1/8	45·6	0·338	0·124	0·422	0·475	6·39	24·68	11427	122
Medium Steel, ...	1/16 × 1/16	103·3	0·056	0·0625	0·0035	0·537	1·287	11·61	871	111
„ „ ...	3/16 × 1/16	71·1	0·184	0·0625	0·0115	0·370	2·756	13·87	2784	108
„ „ ...	3/16 × 1/8	49·8	0·175	0·125	0·0219	0·519	3·67	17·0	5699	116
„ „ ...	3/8 × 1/8	37·8	0·339	0·125	0·0428	0·398	5·464	19·84	10438	109
Hard Steel, ...	1/16 × 1/16	51·3	0·06	0·0925	0·0037	0·274	0·66	11·46	1274	153
„ ...	3/16 × 1/16	41·3	0·191	0·0625	0·0119	0·215	1·656	13·77	3719	139
„ ...	3/16 × 1/8	30·8	0·175	0·125	0·0219	0·32	2·300	15·3	7960	162
„ ...	3/8 × 1/8	19·9	0·362	0·125	0·0452	0·207	3·054	15·42	14217	140
Soft Cast Iron, ...	1/16 × 1/16	105·2	0·0636	0·0625	0·004	0·548	1·267	9·50	489	55
„ „ ...	3/16 × 1/16	85·3	0·197	0·0625	0·0123	0·444	3·109	11·37	1051	38
„ „ ...	3/16 × 1/8	64·4	0·1631	0·125	0·0205	0·671	3·961	10·98	2596	57
„ „ ...	3/8 × 1/8	51·1	0·371	0·125	0·0464	0·507	6·853	12·75	4130	40
Medium Cast Iron,	1/16 × 1/16	54·0	0·0577	0·0624	0·0036	0·281	0·647	10·44	818	102
„ „ „	3/16 × 1/16	44·6	0·171	0·0621	0·01068	0·230	1·5	10·42	2045	85
„ „ „	3/16 × 1/8	31·8	0·1613	0·124	0·0202	0·329	1·996	10·57	3705	82
„ „ „	3/8 × 1/8	23·2	0·354	0·124	0·0443	0·238	3·13	11·10	6035	61
Hard Cast Iron,...	1/16 × 1/16	37·6	0·0595	0·0625	0·00374	0·1955	0·458	11·48	843	101
„ „ ...	3/16 × 1/16	29·7	0·178	0·0625	0·01115	0·1547	1·055	9·08	1875	75
„ „ ...	3/16 × 1/8	22·3	0·163	0·125	0·02032	0·2329	1·346	10·26	3848	84
„ „ ...	3/8 × 1/8	18·9	0·346	0·125	0·0432	0·1969	2·622	11·02	5443	56

TABLE II. ENDURANCE TRIALS—AVERAGE OF RESULTS OBTAINED.

Material operated on.	Description of Tool Steel.	Actual Cutting Speed per min.	Actual Cut.			Duration of Trial.	Area Machined per min.	Weight removed per min.	Cutting Force on point of Tool.	
			Depth.	Traverse.	Area.				Actual force.	Tons per sq. in.
		ft.	ms.	ms.	sq. ms.	mins.	sq. ft.	lbs.	lbs.	
Soft Steel, ...	High speed air hardened	92·6	0·187	0·0625	0·0117	120	0·479	3·69	2417	97·4
,, ...	Ordinary Mushet ...	43·0	0·192	0·0625	0·0119	78·8	0·226	1·74	3100	116
,, ...	Ordinary water hardened	23·1	0·182	0·0625	0·0114	18	0·120	0·871	4920	192
Medium Cast Iron,	High speed air hardened	34·8	0·182	0·0625	0·0114	63·7	0·181	1·21	2934	115
,, ,,	Ordinary Mushet ...	19·5	0·189	0·0625	0·0118	60	0·106	0·69	2620	99·5
,, ,,	,, ,, ...	22·5	0·188	0·0625	0·0117	5·5	0·115	0·68	2050	78
,, ,,	Ordinary water hardened	11·2	0·189	0·0625	0·0118	6·2	0·058	0·19		

A point very clearly seen by a glance at Table I. is that where much metal has to be removed it will be taken off not only much more quickly, but also with a less expenditure of power per lb. of material removed, if a heavy cut is taken at a comparatively low speed in preference to a lighter one at a high speed.

The figures showing the cutting force on tool points should prove of service to machine tool designers.

The information regarding horse power is worthy of special attention, for it is the power element which perhaps will form the greatest difficulty in the way of using existing lathes efficiently with the new high-speed cutting tools. A lathe on which a cut of $\frac{3}{8}'' \times \frac{1}{8}''$ can be taken is by no means an abnormal one, and this duty can be carried out on most good lathes of, say, 12″ centres; but the driving cones, the countershaft, and the belts connected with few such lathes would be suitable for 24 H.P. Further than this, the line shafts in most engineering shops are too light to drive many lathes using 20 H.P. each, or anything approaching that figure.

The writer believes that the problem of improving the output from existing lathes will in many cases need to start with the engines, main-shafting, and countershafts, and from them go to the cones and back gear of the lathes themselves.

Whilst on the question of lathes, one point of importance may be noted from Table II., viz., that when cutting mild steel the force on the tool point increases as the cutting speed falls. Hence, so for as the lathe proper is concerned, irrespective of its driving gear, it would appear to be less severely tried when cutting at a high speed than when cutting at a low speed. From this the deduction naturally follows that, lathes satisfactory for the old steels will be equally satisfactory for the new steels if the gearing end can be altered to meet the new power requirements.

One point which attention to cutting speeds has forced on the writer, is that the speed variation for most lathes moves in steps which are too coarse, often causing the actual cutting speed to be much below the speed which the tool can stand.

With many lathes the rise in speed, when the belt is moved to the next smaller cone, is about 40 per cent.; thus, with a job on which a surface speed of 80 feet can be cut, and one cone step gives, say, a speed of 85 feet per minute, then the next lower step would give only 60 feet, which is equivalent to a 30 per cent. loss of output, as the belt would have to be put on the latter step.

The new requirement of powerful drives is likely to exaggerate this difficulty, as in many cases it is likely that cones having 5 steps will be replaced by cones having 3 or even 2 steps, so as to permit of wider belts. The remedy is to drive by motors having considerable speed range, or to drive the lathe by a mechanical speed device, such as the Reeves' cone arrangement. The next alternative is to vary the traverse or the cut, so as to give an area of cut which suits the speed obtainable from the belt.

The Manchester tests form a valuable record, and should be widely studied It is to be hoped that they will be carried further, so as to include cutting on cast steel and brass, also to include tests with drills and milling cutters.

Discussion.

Mr E. G. CONSTANTINE (Member) said he had had no opportunity of studying Mr Day's paper, but he would just make one or two remarks, and then, if permitted, he would be pleased to take further part in the discussion later on. Mr Day, with his usual modesty, had omitted to state what his connection had been with these tests, but, as a matter of fact, he was the one who suggested them to the Council of the Manchester Association of Engineers, and the credit of the tests was due to him entirely. Another point which he would desire to emphasize was the impartiality with which the tests were conducted. It was felt when Mr Day made his suggestions that it would be very desirable to dissociate them from any possible contention that they had been affected by any personal interest whatever, and therefore on approaching the Technical Instruction Committee of the Manchester Corporation, of which Mr Day was a member, arrangements were

made that the tests should be carried out at the Municipal School of Technology, under the personal supervision of Dr. Nicolson, the professor of engineering, and during all the tests one of the members of the Manchester Association Committee, appointed for this purpose, was invariably present. The object of the tests was, as Mr Day had pointed out, not to ascertain the superiority of any particular make of steel, but to ascertain what could be done with the new high speed steels, so that engineers would be able to compare the results they were getting in their own factories, and to see at a glance whether they were getting as much as they could reasonably expect from the tools they were using. In addition to the chemical analyses, physical tests were made of all the bars operated upon, and full results of these were contained in the report. In passing, he might note an interesting point. There was a critical speed up to which the tools would go, and if they exceeded that, only to the slightest extent, almost immediate failure in some instances occurred. Then, as bearing upon Mr Day's remark regarding the speed variation moving in too coarse grades, as a matter of fact, it was found that by increasing the speed only as much as from five to six feet per minute, or even less than that, a tool which would otherwise run without apparent distress at the lower speed failed almost instantly. Another rather peculiar feature was that the tools in some instances appeared to fail and then recover themselves. They seemed to get what one might term their "second wind" and another cutting edge, and they went through the tests without failure. The curious point which Mr Day had drawn attention to was somewhat surprising, that of there being a less expenditure of power with a heavy cut at a comparatively low speed than with a lighter cut at a comparatively high speed, and it was somewhat remarkable that in many of the tests the pressure on the tool apparently diminished, or at all events the horse power required to drive the lathe was less if the tool had been working for some time than immediately, or shortly after, cutting commenced. He did not quite agree with Mr Day's suggestion that strengthening the gearhead of the lathes

would be in some cases sufficient for using a high-speed steel to obtain the maximum results. What had been found was that, in addition to requiring a very strong headstock, a heavy saddle was also necessary, otherwise the vibration was so great that it would be impossible to take any considerable depth of cut. On the first lathe tested that was apparent, and a stronger saddle was fitted, so that the conclusion he had arrived at was that, unless a lathe had a very strong bed, and a very strong saddle, and a very strong headstock, the maximum results could not be obtained with a high speed. He might say that the full report of the tests, with the discussion on it, was now in the press, and when any further discussion took place on Mr Day's contribution he hoped to have an opportunity of presenting a copy to the Institution.

At a meeting of the Institution held on 22nd March, 1904, Mr Constantiue remarked that he did not propose to say very much more on this subject, because he had with him his friend Mr Adamson, who was the Hon. Secretary of the Tool Steel Committee of the Manchester Association of Engineers, and who had done more than any other person towards the carrying out of the tests in the School of Technology in Manchester; but there were one or two points which he might allude to without taking the wind out of Mr Adamson's sails,—one was with regard to the finish which was obtainable with high speed cutting steel tools. Some doubt had been expressed on that point, which was one not tested in the experiments carried out in Manchester; but he understood that, from experiments which had since been made, there was no doubt that an equally good finish could be obtained with high speed cutting steel tools as with ordinary steel tools. Another point, was the lubrication of the cutting edge. That also was not tried; and he would suggest that any gentleman who was interested in the subject might with advantage try that method of cutting with high speed steels, and probably find some advantage from it. With regard to the chatter which took place in some of the tests in Manchester, when a very heavy cut was being taken, that was proved to the satisfaction of the Committee to be due to the

synchronisation of the spring of the lathe with the speed of the gearing of the headstock, and that when the speed was varied slightly chattering ceased. An important revelation was made with the excessive vibration. It was thought that, when the biggest cut, namely, $\frac{3}{8}$ths by $\frac{1}{8}$th of an inch, was taken, and severe chattering took place, the cutting edge of the tool would be damaged, but nothing of the kind occurred, and when the vibration ceased owing to an alteration in speed, the cutting was quite good and the edge of the tool was not at all injured. Some very interesting experiments were being carried out by Dr Nicolson to ascertain the best shape and angle of tools, and in order to enable him to do this, he had attached no less than four dynamometers to the lathe saddle from which he could ascertain the pressure forcing the tool from the work, the downward pressure, and also the side pressure; and a peculiarity noticed was that when taking a light cut, namely, $\frac{1}{16}$th by $\frac{1}{16}$th of an inch, the tool in some instances overran the travelling screw, the pressure on the side of the tool next the loose headstock being relieved and transferred to the leading side of the tool; but when it was put on the heavier cut, the pressure was restored to the trailing side of the tool. Another feature of which a further investigation was required, was, as to the cause and failure of the tools. When tools reached a certain temperature—which was particularly noticeable in cutting cast-iron—the cutting edge failed almost instantaneously, and the cuttings or rubbings were of a dull red heat. Better results might be obtained with larger sections of tool steels. In fact, Mr Wicksteed, President of the Institution of Mechanical Engineers, who had been carrying out tests, found that he got better results by having heavier tools. He (Mr Constantine) supposed that was explainable by the greater mass of metal conveying the heat away from the cutting edge. One somewhat curious result of the tests which had been conducted, was the improvement that had taken place in the quality of self-hardening steels. It was stated that self-hardening steels were now made of such a quality that existing lathes, while not of sufficient power to utilize the high speed steels, could be speeded

up very considerably, and improved self-hardening steels used with advantage. Another factor which had resulted from the introduction of these high speed steels was in the making of heavy forgings. Everyone knew that it had been the pride of those forge masters who took the greatest interest in their work, to turn out heavy forgings, such as crank shafts, with a "fancy finish," so that very little machining was required. This "fancy finish" naturally took time and very considerable skill, and it was found that it was cheaper to take off a little more metal in the lathe than formerly, and save the time of the forgers. He would like to draw special attention to the cordial co-operation which had existed between the Municipal Authorities and the Manchester Association of Engineers, in the conduct of these tests, and he would suggest that that was an example which might be followed with advantage in other communities,—that union of Municipal Authorities, who had plenty of money to spend, and facilities at their disposal for carrying out experiments, with Councils of Institutions such as he was addressing, from which the practical experience and knowledge essential to securing the best results could always be obtained.

Mr DANIEL ADAMSON (Hyde), after expressing the pleasure he had felt in coming to the Institution, said he had hoped to hear some local speakers on this most interesting subject. In his paper Mr Day had given a diagram of the average results of the various experiments, including practically all the good tools. The corresponding diagram in the original report included all the tools—those that failed as well as those that had succeeded. Mr Day had left out those that failed, the speed of which was higher than the rest, and therefore his average curve was lower, and he (Mr Adamson) was of opinion that it was too low, because amongst those that succeeded there were several tools which had been run at speeds much too low. For the purpose of the investigation, however, the curve showing the maximum result was what ought to be paid attention to, because the curve for maximum results included tests all upon the same basis—that was, each test was

the best in its particular class; whereas, if results were considered which did not succeed it would not be a good relative comparison. The value of the general direction of the curve was to indicate the change in speed necessitated by a change in the cut or traverse. Mr Day had taken the gross horse power but that was somewhat misleading, as there were more shafts and belts in use than was generally the case in workshops. It would have been better to have taken the nett E.H.P., as given in the report. Mr Day had remarked on the condition of the tools at the end of the experiments, but perhaps that was not very clear to the Members. The seven or eight tools which had been tried on each cut were arranged in what was considered to be the order of damage done to the cutting edge. The work the tools had done was fully described in the report, and the numbers given indicated the amount of harm done to the tool while doing that work; but even this required some modification, because in a few instances the tools were run longer than would be done in ordinary workshop practice, in order to fully satisfy the tool steel representatives that the tool was really done up, the result being to do more damage to the cutting edge than was comparable with the result accomplished. In the technical papers there had been a certain amount of correspondence and criticism to the effect that one or two firms had come out better than others, and some were disappointed because they were not invited to participate in the trials. He would like to point out that the committee had avoided making any comparisons, but every maker, whose tools were tried, was represented in a table showing the best results obtained. If one maker appeared more often than another it was more a matter of good luck than any difference in the quality of the steel. One interesting point in the complete report was that, a great difference was shown in power absorbed if one make of tool was compared with another make of tool in removing a certain amount of material. It could not have any connection with the quality of the steel, but showed that the shape of the tool favoured by a particular maker had advantages over other shapes. For

instance, the power required per lb. of steel removed per minute varied from $2\frac{1}{4}$ to 3 H.P. and from $1\frac{1}{2}$ to $2\frac{1}{8}$ H.P. with cast-iron. That showed a considerable variation on the same material, so far as the average results were a guide, and it showed that there was still a large field for investigation left in regard to the best shape of tools. He might say that the field seemed to be open for very many further investigations based upon that report as a foundation. Dr Nicolson was at the present time engaged in a series of investigations in this line, and the results were expected to be ready for the Summer Meeting of the Institution of Mechanical Engineers. Another point he would like to refer to was that he had found out that the medium cast iron, which was intended to represent the average quality of cast iron in commercial use, was really much harder than that usually obtained in their own shops. For example, a tool which failed at 56 feet per minute, but ran satisfactorily for half-an-hour at 48 feet per minute in the speaker's own works, when sent down to the Manchester Technical School and tried on the sample bar failed at this speed in less than one minute. In making comparisons with the reports given in, some people had been disappointed with the amount of material removed per minute and the speed, but he would like to draw attention to the length of the runs (from twenty minutes to two hours), as compared with those of only a few minutes duration which was usually the case when good results were published, especially of unofficial experiments. Again, the cuttings were weighed as they left the lathe, which was a very different matter from calculating the weight. If at a speed of, say, 50 feet per minute the weight being removed was calculated, one need not be surprised to find the actual weight of the cuttings to be only about 70 per cent. of the expected weight, due apparently to the spring of the lathe or slowing down of speed. The complete report would be ready very soon, and it could be obtained from the Secretary of the Manchester Association of Engineers, if any one was sufficiently interested to study it. One very interesting feature, he considered, was that it contained sheets of diagrams of the shapes of all the tools which had been experimented with.

Correspondence.

Mr F. J. ROWAN (Member of Council) considered Mr Day's paper remarkable, as showing how much interest and instruction might be yielded by systematic observation of even the simplest and most ordinary operations in engineering. The full report of the Manchester experiments, as foreshadowed by Mr Constantine, would be of much value as a mine of information on this subject. Perhaps some portions of that report, such as those showing the effect of different forms of cutting edge, were needed to explain some apparent discrepancies in Mr Day's Table I. between some of the results of cutting, and also the "curious point" referred to by Mr Constantine. In Table I., for instance, in three experiments, with as nearly as possible the same actual cutting speed in feet per minute, namely:—In soft steel, 45·6; in medium steel, 37·8; and in soft cast iron, 51·1; with the same depth and traverse of actual cut, and practically the same area machined in square feet per minute, and pretty nearly the same weight removed in lbs. per minute, the horse power at the moter varied from 24·68, and 19·84 to 12·75 (or nearly as 2 to 1 in the first and last cases), and the cutting force on the point of the tool in tons per square inch varied from 122 and 109 to 40. Another instance of similar discrepancy was shown by taking the first experiment in soft steel, actual cutting speed 128·4 feet per minute, and the first in soft cast iron, speed 105·2 feet, the depth and traverse of cut and the area machined per minute being practically the same in both instances, as well as the weight removed per minute; but the horse power at the motor was 14·24 in the one case, and only 9·50 in the other, while the cutting force on the point of the tool was 108 tons per square inch in the first, and only 55 tons per square inch in the second case. Similar apparent anomalies cropped up in the other parts of the Table when cutting speed, horse power employed, and cutting force on the tool were compared; but it was not unlikely that these would be found to throw some light upon the suitability of form of cutting edge which had been used.

Mr Robert Lang.

Mr Robert Lang (Member) had pleasure in congratulating the Institution on securing such valuable data so carefully prepared in tables, etc., by the committee associated with Mr Day in these experiments, and he felt sure the Members of the Institution would find the information given of very great use in comparing the results with those obtained in the various works with which they were connected. One very practical and important point brought out by these experiments was that, for high speed cutting the lathes presently in use were not sufficiently powerful in gear unless for very light cuts. Fortunately, however, in the majority of engineering works high speed in combination with heavy cutting was not required for general work, otherwise considerable expense would be incurred in providing new and suitable lathes. During the last two or three years in which the evolution of the high-speed tool had taken place, it had been found convenient in many workshops to increase the speed of countershafts to double, and in some cases to treble their former speed. This plan was adopted by the writer's firm some years ago with excellent results. By adopting this system the output of each lathe was considerably increased. One slight disadvantage occurred, however, owing to the lathes so treated not being suitable for taking finishing cuts unless when working with small diameters. Naturally this drawback did not affect the larger firms who had other lathes to fall back on such work. One feature worthy of special notice in Mr Day's paper, and emphasized by him, was the loss sustained by the difference of speed in moving the belt from one step of cone to the other. In ordinary double-geared lathes the average variation in changing from one step of cone to the next one was about 50 per cent. This fault was accentuated in many high speed lathes, owing to the width of belt necessitating fewer steps in the cone. Many high speed lathes were now made in which the variation of speed in changing from one step of cone to the other amounted to 68 per cent. The difficulty was partly overcome by having a double-speed countershaft reducing the variation to 34 per cent. Realizing the great loss incurred on general work when

using the double-geared type of headstock having large variation or jump at each change of step, the writer's firm, some time ago designed a special headstock for use with high speed lathes. In this headstock the cone was made of extraordinary large size as compared with height of centres, the cone was placed on the side shaft and was geared to the spindle at a ratio of six to one. The variation of speed in changing from one step to the other was only 30 per cent., and with a double-speed countershaft this was reduced to 15 per cent. Owing to the large diameter of cone, a high belt velocity was obtained without unduly increasing the speed of the countershaft. Besides the six to one ratio of gears in this headstock a further reduction was added at three to one ratio, so that the headstock could be used with a 6 to 1 or 18 to 1 reduction at pleasure. The advantage secured by this design was that two speeds could be quickly secured—one for high-speed cutting and the other for finishing—without changing the belt on the cone or countershaft. For example, on a 13-inch centre lathe of this type, a medium hard steel bar 6 inches in diameter could be put between the centres, and a cut $\frac{1}{4}$-inch deep with $\frac{1}{8}$-inch advance could be taken at 50 feet per minute cutting speed, and by convenient change of gear the speed could be reduced to 20 feet per minute for finishing without interfering with any belts whatever. An illustration of this lathe was shown in Fig. 3. In discussing the problem of what a lathe should be, Mr. Day emphasized the necessity of correct speeds for all diameters to be obtained either by electrical or mechanical means. Probably Mr. Day would be interested to learn that he (Mr. Lang) had designed a mechanical arrangement for giving a correct gradation of speeds from the highest to the lowest on a lathe headstock, the arrangement being such that no countershaft was required. Mr Constantine, in his interesting remarks, mentioned, amongst other things, the necessity of a very heavy saddle for high-speed lathes, and instanced the failure of the first saddle in the lathe used for the Manchester experiments. He did not quite agree with him in his finding, however, as the design had probably a good deal to answer for in

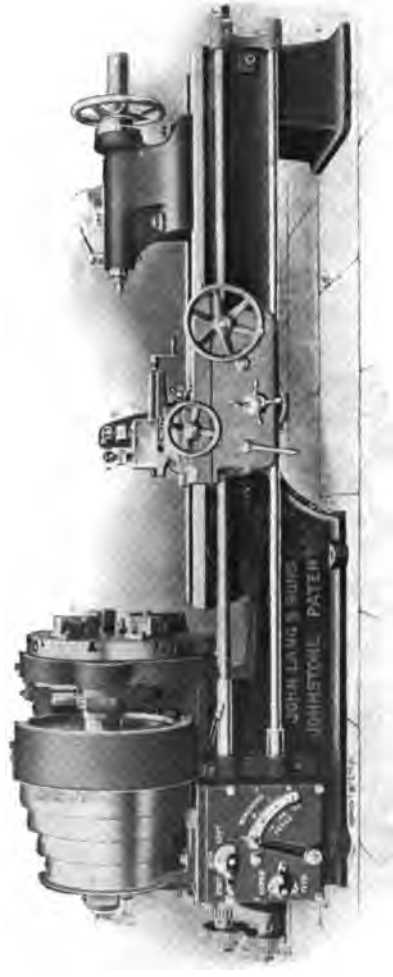

Fig. 3.

its want of rigidity and weakness in the saddle referred to. In the usual standard bed and saddle, such as was used in the lathe on which the experiments were made, the length of longitudinal guide for the saddle would probably be not more than twice its width. In all high-speed cutting, as well as other lathes, it had been found of very great importance to use a type of bed in which the longitudinal guide for the saddle was from eight to twelve times its width. This system ensured much greater rigidity as well as freedom of movement, and assisted to a considerable extent the duration or life of the tool.

Mr DAY, in reply, said that while Mr Constantine had mentioned that a good finish could be obtained at high speeds of cutting, his experience, so far, was that a good finish at high speeds could not be obtained, and one had to finish with ordinary tools at quite slow speeds. It would be a great point for the Members of the Institution to know the particulars regarding finish at high-cutting speeds. His experience was that it was better to lubricate the tools freely. Mr Constantine said that at Manchester, it was found that much of the vibration was due to a synchronisation of the movements in the slide rest and the movements tending to be produced by the gear. Although that was possible, it somewhat contradicted the statement he, Mr Constantine, made last month to the effect that in order to remedy this defect, excessive strength was necessary. His own experience was that certainly with good lathes, even if some years old, nothing very special was necessary to obtain results nearly equal to those recorded at Manchester, and much better than were usually obtained. The great bogey that was brought before most people in connection with high speed steels, was that if good results were to be obtained, then new machinery would be required. As he had said before he did not believe it, and if the paper impressed the fact that greatly improved results could be obtained from existing tools, it would have done one service he intended it to do. Mr Adamson had criticised the basis of his average curves and he would defend them a little. He had given two sets of curves

in the paper, one showing the maximum results obtained in each series of tests, and in every day work maximum results ought to be aimed at as the ideal, but by adopting the average results they would be able to say to their foremen, "Here is a series of curves shewing cutting speeds which I know can be got," and then insist on getting similar results; believing it was better to have a rule that could be generally kept than to lay down a law which would frequently be broken. He had given the gross horse powers rather than the nett powers for the purpose of indicating the power that was necessarily involved in driving a lathe. Mr Adamson had made a correction to a remark in the paper and it was well to remember this correction. The paper stated that the medium cast iron would correspond with the average cast iron used in works, but Mr Adamson pointed out that the medium cast iron used in the trials was decidedly harder than the cast iron usually adopted in works, consequently the speeds given for medium cast iron should be easily attained. In the shops he was connected with he found that with cast iron the results shown by the curves were consistently beaten, which confirmed Mr Adamson's remark. It was most important to remember that the Manchester trials were not show trials, but were of a very practical nature, and gave figures which should be made use of and put into service in shops generally. In answer to Mr Rowan he thought that, the difference in horse power under like conditions of speed and cut would, on closer examination of the tables, be found to be mainly due to the description of the material being cut and it would be seen that less power was required to cut cast iron than steel. He was pleased to find that Mr Lang endorsed many of the points mentioned in the paper in regard to facilities for adjustment of speed. He (Mr Day) was well aware of Mr Lang's arrangement for varying the speed of lathes, but did not refer specially to it as he had no actual experience of its use.

The CHAIRMAN (Prof. J. H. Biles LL.D., Vice-President) observed that this was a subject which had a very important money-making bearing. The Institution should be gratified that gentlemen had

come from Manchester to take part in this discussion. It showed that the subject was of wide interest, and it showed the good feeling that existed between the engineers of Manchester and Glasgow. He asked those present to accord a hearty vote of thanks to Mr Day for his interesting paper.

The vote of thanks was carried by acclamation.

THE HEWITT MERCURY VAPOUR LAMP.

By Professor MAGNUS MACLEAN, M.A., D.Sc. (Member).

(SEE PLATE XIII.)

Read 22nd March, 1904.

INTRODUCTION.

THE first to investigate the arc between mercury electrodes was Thomas Way who performed experiments from 1857 to 1861 on a mercury arc in air of atmospheric pressure. These were described in "Dingler's Polytechnic Journal" for 1860 and 1861. The next important advance was by Rapieff in 1879, who started the arc in a closed vessel by bringing the two electrodes together and then separating them. He noted that it was desirable to have an exhausted space, and had a chamber in which to condense the vaporised mercury. But the most exhaustive study of the mercury vapour lamp in a partial vacuum was made by Arons, in 1892, who published his results in 1892 and 1896. The difficulty was, and is, to get the arc started, because the resistance of mercury vapour and especially the resistance between the cathode and the vapour, was very considerable even at moderate temperatures. The difficulty was overcome by Arons in two ways, and his were the methods also used by P. Cooper-Hewitt. The first consisted in bringing the electrodes together, and then separating them; and the second in using a very high inductive voltage to break down the initial resistance. A third and ingenious method was described by Dr Weintraub in the "Philosophical Magazine" for February. Indeed, any one interested in the subject of arcs in metallic vapours in an exhausted space, should carefully read that paper.

DESCRIPTION OF HEWITT LAMP.

Cooper-Hewitt first brought his lamp to the notice of the public in April, 1901, nearly three years ago. The extreme length

of the lamp exhibited was 25 inches and diameter 1 inch. It was a 50-volt lamp, took from 3 to 3·5 amperes, and it was intended to be suspended at an angle of 30 degrees from the horizontal, Fig. 1. The method of starting it was by tilting it so as to cause a stream of mercury to flow in the tube. This connected the two electrodes metallically, and the incandescent lamps in parallel were automatically cut out of the circuit, Fig. 2. The voltage had to overcome three resistances (1) that between the anode and the vapour; (2) that of the column of vapour; and (3) that between the vapour and the cathode. This last was high before the lamp started, and the main cause of the difficulty in starting the lamp was due to it. The resistance of mercury vapour at different pressures and at different current densities had been very fully investigated by Hewitt. He found that for a pressure of 2 mm. of mercury, there was a fall of potential of ·64 volt per cm. in a tube of 3·8 cm. diameter with a current of 3 amperes, Fig. 3. He also found that the resistance of the mercury vapour varied directly as its length and inversely as its diameter. Platinum wires were used in the usual way for leading the current from the leads into the mercury terminals of the lamps. Above the cathode a cooling chamber for condensing the vaporised mercury was attached, by means of which the pressure of the mercury vapour inside was controlled while the lamp was burning. This pressure was given as 2 mm. of mercury, and if there were no residual gases left, the temperature of mercury vapour would be about 200 degrees C., according to the experiments of Ramsay and Young. The glass got somewhat hotter than the globes of ordinary incandescent carbon lamps. The size of the cooling chamber depended on the length and cross section of the lamp, for Hewitt held that he had experimentally proved that the highest light efficiency was got from a mercury vapour lamp when the vapour density and the current had a definite relation.

CHARACTERISTIC AND EFFICIENCY.

The characteristic curve of the lamp, that was the relation

between volts and amperes, was shown in Fig. 4. From this figure it would be seen that within the limits of the proper efficiency of the lamp, large variations in current showed but small variations in the voltage at its terminals. But when it was pushed beyond its proper limits as to amperage, the volts at its terminals rose very rapidly. This was a characteristic of almost all arc lamps. As to its efficiency, it was claimed that at the best part of the curve it gave a candle power per 0·4 watt. The writer tested this particular lamp in his own laboratory with 43 volts and 3·5 amperes, and the mean candle power, as ascertained by himself and four of his senior students, in a horizontal direction from its middle, was 235. This gave 0·64 watt per candle power.

COLOUR.

The lamp had no red rays, and therefore was unsuitable as a source of light where colours had to be determined. On the other hand it was not so fatiguing to the eyes as lights which were rich in red rays, and it cast no sharp shadows on account of the large surface of illumination it had. It was rich in chemical rays, and therefore suitable for photographic purposes.

LIFE.

Lamps had been run for over 4000 hours, but 1500 hours might be taken as an average. The blackening of the walls, due perhaps to deterioration of the vacuum, was probably the main cause of the gradual decrease of its candle power and inefficiency.

The CHAIRMAN (Prof. J. H. Biles, LL.D., Vice-President) remarked that the only drawback to the Cooper-Hewitt lamp was that under its light every one present looked so much changed, and the change was not pleasant. He had pleasure in moving a vote of thanks to Dr Maclean for his interesting paper.

The vote of thanks was carried by acclamation.

THE USES OF THE INTEGRAPH IN SHIP CALCULATIONS.

By Mr John G. Johnstone, B.Sc. (Associate Member).

(SEE PLATES XIV., XV., AND XVI.)

Held as read 22nd March, 1904.

Having had some experience in the use of this machine in connection with some special calculation work recently done for the Admiralty Committee on Torpedo-boat Destroyers, I have had the opportunity of judging of its capabilities as compared with those of other instruments—the integrator and the planimeter—which are ordinarily used in ship calculations.

The integraph has been in existence for about twenty years. A special form of it for calculation work in connection with the strength of ships was made by M. Coradi for the Naval Architecture class of Glasgow University about ten years ago. This kind of instrument was very extensively employed in the work for the above-named Committee for many developments of the ordinary strength calculations, but it has not, so far as I am aware, been used in connection with calculations relating to the form of the vessel, such as displacement, centre of buoyancy, stability, &c.

Professor Biles suggested that I should make the integraph the subject of a short paper, with the object of bringing it to the notice of the Members of this Institution. The intention of writing the paper has been to give a short description of the nature of the work of the integraph, and how it can be applied to calculations relating to a vessel's form.

In order to make the paper more complete, a short description of the machine and the properties of integral curves have been added, as an appendix.

The majority of ship calculations are in the nature of an integration. The integration is ordinarily performed by the aid of graphical rules, or such instruments as the integrator and the planimeter. These instruments, however, only give a definite integral for one complete operation. For instance, the planimeter or the integrator, after having been towed round the boundary of a given area, records only one result, the area, moment, or moment of inertia of the whole curve which has been traced over. The integraph, on the other hand, traces out graphically the integral of the curve, point by point, from the beginning to the end of the operation. This graphic integral curve can only be obtained by a series of operations of the integrator or the planimeter, and setting off the readings obtained at the end of each operation, as ordinates to form the curve.

The machine, in its latest type, is illustrated in simple diagrammatic form in Fig. 1.

This type will integrate in one operation a curve whose maxim ordinate on either side of the axis does not exceed 10 inches, and it will integrate an area not exceeding 120 square inches.

As shown in Appendix B, the first integral curve gives the area of the given curve up to any ordinate. By tracing over the first integral curve, a second integral or moment curve is obtained, which gives the moment of the area of the given curve, and by tracing over this curve the third integral or moment of inertia curve is obtained, which gives the moment of inertia of the given curve about any axis, Fig. 2. From the second integral curve the position of the C.G. of any part of the curve may also be ascertained.

APPLICATION TO SHIP CALCULATIONS.

The ordinary ship calculations of displacement and position of centre of buoyancy are much simplified by making use of Tchebycheff's rules for the spacing of ordinates. In the examples which have been worked out in connection with this paper, Fig. 3 shows a body plan with sections spaced to the rule for three

ordinates; and in the body plan, in Fig. 9, the sections are spaced to the rule for two ordinates.

Curves of Integrated Sections.—The machine is set so that it runs along the vertical middle line of the body plan as axis. The sections are then separately traced over with the pointer, and corresponding integrated sections are thereby quickly and conveniently obtained, Fig. 4.

Comparing the body plans of ordinary and integrated sections, corresponding points are at the same height above the base line through the keel. Any ordinate of an integrated section gives the area of the corresponding section up to that ordinate. Therefore, if the ordinates of the integrated sections at any water-line be added, the sum is a function of the displacement. This enables a displacement curve to be set off.

Displacement Curve.—There is a quicker method than that described in the preceding paragraph for obtaining a displacement curve. If the ordinates at any water-line of the sections in the body plan, Fig. 3, are added, the sum measures the area of the water-plane. It is easy to set off a curve of "areas of water-planes," and this when integrated gives the displacement curve.

In Fig. 5, K A is a curve of water-plane areas, and K D is the integral curve which is the displacement curve.

Centre of Buoyancy Curve.—The displacement curve, when integrated, gives a moment of displacement curve. (See Properties of Integral Curves). The ratio of the corresponding ordinates of these two curves fixes the position of the centre of buoyancy. Thus, in Fig. 5, K M is the moment of displacement curve, the displacement curve being K D. The corresponding ordinates at the 7 feet 6 inches water-line are $v\ m$ and $v\ d$ respectively. The distance of the centre of buoyancy t for the 7 feet 6 inches water-line is given by $v\ t'' = \frac{v\ m}{v\ d} \times 6''$ for scale. Similarly at draught 17 feet 6 inches, the centre of buoyancy, T is given by $V\ T'' = \frac{V\ M}{V\ D} \times 6''$.

If, then, the heights K t and K T are plotted in terms of the draughts, then a centre of buoyancy curve is the result, which in this case is shown by K b B.

Many calculations can be simplified by using the body plan of integrated sections. For instance, the displacement at any given trim can be easily obtained, and, therefore, the moment to change trim one inch can be determined. The ordinates at any water-line of the integrated sections, set off in terms of the length, give a curve of sectional areas. These curves, when integrated twice along the length, will give the longitudinal positions of the centres of buoyancy in a manner similar to that described for obtaining the vertical centre of buoyancy. Areas of water-planes, when integrated twice along the length, give the positions of the centres of gravity of water-planes.

The integrated midship section is a curve of midship areas, and from this curve and the displacement curve the prismatic coefficient curve can be obtained.

Longitudinal metacentric height can be roughly obtained from the moment to change trim one inch.

Moment to change trim one inch $= \frac{\Delta \times G M}{12 \times L}$. The transverse B M $= \frac{I}{V}$. The value of I, the transverse moment of inertia of the water-plane, can be obtained by the machine in three operations, but the water-plane first requires to be plotted to a convenient scale. It would seem that the ordinary arithmetical method of calculating I is slightly quicker in this special case.

The following curves are usually obtained by the methods framed in the displacement sheets. They can be readily obtained by using the integraph as already described :—

Displacement curve,
Block coefficient curve,
Water-line areas or tons per inch,
Vertical centres of buoyancy,
Longitudinal centres of buoyancy,

Locus of C. G.'s of water-planes,
Moment to change trim one inch,
Midship areas and coefficients,
Prismatic coefficient curve,
Longitudinal metacentres;

and for Transverse metacentres the calculation is simplified.

The scales used in the integrations for obtaining the above curves are fixed by the scope of the machine. It is found that the curves can be worked very conveniently to standardised scales, so that the results can be traced on to the 10-inch standardised diagram.*

Strength Calculations.—The Figs. 6 to 12 illustrate an example of the ordinary strength calculation, the vessel in this case being a torpedo-boat destroyer, supported in the hollow of a wave.

In a strength calculation the first thing to do is to set up a weight curve from a given list of weights. It is necessary to determine accurately the centre of gravity of this curve, and, as the area of a weight curve is not usually within the scope of an integrator or a planimeter, this operation is rather long and troublesome. The centre of gravity can be determined by the integraph by integrating the curve twice, and drawing the tangent to the second integral curve at its final ordinate. The longitudinal position of the centre of gravity of the weight curve is where this tangent cuts the base line, as shown in Fig. 7. This tangent can be accurately drawn by the integraph. The final ordinate of the first integral of the weight curve represents the total weight. Suppose the buoyancy curve to be constructed, then it satisfies the following two conditions :—

(1) The area of buoyancy curve equals the area of the weight curve.

* See paper on "Standardisation of Ship Calculations," by Professor J. H. Biles, read before the Institution of Naval Architects in 1901.

(2) The centre of gravity of the buoyancy curve is in the same longitudinal position as the centre of gravity of the weight curve.

Therefore, on Fig. 7—

(1) The final ordinates of the first integrals of the weight and the buoyancy curves are equal.

(2) The final ordinates of the second integrals are equal, and the tangents are coincident.

The quickest way to obtain the buoyancy curve is to draw the integrated sections in their corresponding position on a profile of the vessel. Then, placing the water-line over this, the buoyancy per foot of length at each section can be read off, Fig. 6. This method saves the necessity of transferring the vertical heights of the intersections of the wave-line to the body plan, and then taking the areas of the submerged parts of each section. It is also easy by this method to get the correct position of the wave-line relatively to the ship by a trial and error process.

Having obtained the weight and buoyancy curves, the load curve can be next constructed, and this curve when integrated gives the curve of shearing forces for the first integral, and the bending moment curve for the second integral, Fig. 6.

In Fig. 7 it has not been necessary to draw out the load curve. In this figure the weight and the buoyancy curves have been integrated twice. The difference of the ordinates of the first integrals gives the shearing force, and the difference of the ordinates of the second integrals gives the bending moment. The scales for the shearing force and bending moment in the method illustrated by Fig. 7 are necessarily smaller than those for Fig. 6.

If the maximum bending moment only is required, the method of Fig. 7 can be followed, and the area of the difference of the first integrals to one side of their intersection gives the maximum bending moment. If the buoyancy curve has been hurriedly constructed, and the position of the centre of buoyancy is in consequence only approximately correct, a sufficient approximation to

the true maximum bending moment will be found by taking a mean of the areas of the difference of the integral curves on either side of their intersection.

Moment of Inertia Calculation.—The calculation for the moment of inertia of the cross section of a ship is generally done arithmetically by calculating the moment of inertia of the cross sectional area of each item that contributes directly to the longitudinal strength. If, however, the "equivalent girder" is set up by the usual method, and integrated three times, the result is a curve of moment of inertia about any axis; the correct position of the centre of gravity can also be found, and hence the neutral axis. If it can be said that the labour of constructing the "equivalent girder" is less than the labour of calculating arithmetically the moment of inertia, then this method is to be recommended. It has the further advantage that if it is desirable to plot a shearing stress curve, the second integral curve gives the value of $A\bar{y}$ in the expression for shearing stress, namely, $q = \frac{F A \bar{y}}{b I}$. Fig. 8 illustrates an example of a moment of inertia calculation for a small one-decked vessel with light scantlings.

Deflection of a Ship.—The deflection of a ship due to the change in bending moment from one condition of load to another, can be estimated by the method outlined in a paper read before the Institute of Naval Architects, in 1890, by the late Mr Read.

If M represents at any point of the length of the ship the change in the bending moment, and I represents the moment of inertia of the corresponding cross section, then the change of form or deflection y is given by (considering the ends fixed)—

$$E\,y = \int_o^l \int_o^l \frac{M}{I}.\,dx.\,dx. - \int_o^x \int_o^x \frac{M}{I}.\,dx.\,dx.$$

Where E is the modulus of elasticity for the structure as a whole, l the length of ship, and x the abscissa of the section along the length.

This integration can be very simply performed graphically All that is necessary is to plot the $\frac{M}{I}$ curve, and integrate it twice with the integraph along the length.

The second integral curve is the curve which gives the change of form, and is

$$E\,y = \int_o^x \int_o^x \frac{M}{I} . \, dx. \, dx.$$

When I is constant throughout the length, as in the case of a beam of uniform cross section, the section becomes

$$E\,I\,y = \int_o^x \int_o^x M. \, dx. dx.$$

and, therefore, the deflection can be obtained by integrating the curve of change of bending moment twice. This calculation for deflection has often to be made for beams and girder work, so that the machine may possess some interest for engineers.

STABILITY CALCULATIONS.

The general problem in dealing with the question of stability is to obtain a set of curves which will give the position of the centre of buoyancy for any displacement and any angle of heel.

An "isovol" is the name generally given to the locus of the the centre of buoyancy for a constant displacement and varying angle of heel. An "isocline" is the name of the locus of the centre of buoyancy for a constant angle of heel and varying displacement.

The following method gives an easy way to obtain the isovol curves, Figs. 9-13.

First make the ordinary stability body plan. In Fig. 9, the body plan sections are spaced according to Tchebycheff's rule for two ordinates. From the body plan construct a series of "area of water-planes" curve, Fig 10. The "area of water-planes" curve

at any inclination, can be obtained in the same way as has been already described in obtaining the ordinary displacement curve. This method is liable to give slight inaccuracies at water-planes cutting off small displacements, but there seems to be sufficient accuracy in order to obtain a good final result. "Water-plane area" curves have been set for angles of inclination 0°, 15°, 30°, 45°, 60°, 75°, 90°, in Fig. 10. These curves when integrated, give displacement curves as in Fig. 11.

The displacement for each inclination varies from zero to total submersion. A check on the accuracy of the curves is afforded here, as the final ordinates of the curves are all equal. Generally it is found that the maximum ordinates of the 0° and 90° curves are exactly equal, and the others differ a little. By integrating the displacement curves, "moment of displacement" curves are obtained, and then, by taking the ratio of ordinates, the heights of the corresponding centres of buoyancy are ascertained. These curves are shown in Fig. 12.

In Fig. 11 a series of lines can be drawn which give certain percentages of displacement, so that for each percentage, the height of the centre of buoyancy corresponding to any angle of inclination can easily be determined. In the figures, percentages have been taken from 20% up to 90%. The heights of the centres of buoyancy so found can be transferred to the body plan, and a series of lines drawn, which, for the same percentage of displacement, will be tangents to the corresponding isovols. It has been found that the isovols can be drawn very accurately by this method.

The cross curve to the isovols—the isoclines—can be approximately constructed by drawing the line through the points where the isovols touch the tangents which are parallel, but it has been found that where the isovol curves are flat, an individual spot on the isovol for an isocline cannot be determined with certainty. However, considering that the isocline should be a fair curve, this method seems to be fairly accurate. In any case a check can be made for a few spots on the isoclines by the integrator in the usual way. The curves in the figure were drawn out by the means

already described, and it was found that the isocline curves corresponded closely with the spots obtained by an independent series of integrator readings.

Regarding the reliability of the work done, the machine requires careful handling to produce good results. Faults in the working of it are very likely to occur to one not accustomed to its use, but with experience these faults can be easily eliminated as they are generally due to careless adjustment or setting. For good working it should be used on a strong level board, to which the paper should be carefully pinned down.

There are many interesting and special problems in naval architecture that can be greatly simplified by using the integraph, but I think enough has already been described in order to present an idea of its general utility in ship calculations.

APPENDIX A.

Description of the Integraph.*

Fig I. represents the latest type of this machine. The figure has for simplicity been drawn in diagrammatic form.

The motion of the machine is governed by the two non-slipping wheels W and W_1, which are fixed about 22 inches apart on the spindle A B. On this arrangement are suspended two grooved bars $a\ b$ and $a_1\ b_1$, each of which is grooved to carry an arrangement of travelling wheels. These travellers are shown at $e\ e$ and $f\ f$. The bars $a\ b$ and $a_1\ b_1$ are fixed together at their ends and at the centre. In the centre piece there is a pivot or hinge C through which a long radial bar can slide. The radial bar can also revolve about C. A scale bar E P, on which is measured inches, is supported at right angles to A B, and is fixed to the traveller $e\ e$. At the end P of this scale bar there is a tracing point.

A vernier arrangement, with a pivot joint attachment Q, slides along E P, and can be fixed at any point on the bar along the scale. The radial bar passes through the pivot Q, and can be fixed at Q so as to

* For a more detailed description of the Integraph see a pamphlet, L'Intègraphe Abdank-Abakanowicz par Henry Lossier, publie par G. Coradi, Zurich (Suisse.)

prevent it from sliding, but permits it to revolve about Q. The recording pen P_1 is fitted into a bar $F P_1$ supported at right angles to the bar $a_1 b_1$ from the traveller ff on $a_1 b_1$.

P_1 records the movements of a small wheel w which has a sharp edge. This wheel can be lowered on to the paper when the machine is to integrate, and it is so fitted that it can revolve about a vertical axis through its centre. The direction of this wheel is governed by the parallel motion M N, the end M being free to travel on the radial bar as shown. It will be seen that the wheel w is thus always kept parallel to the radial bar.

Setting the Machine.

When the machine is stationary the tracing point can be moved parallel to the bar $a b$. Before integrating a given curve, the machine must be placed so that it runs parallel to the axis of the curve. When the inclination of the radial bar is zero, i.e., when it is perpendicular to A B, the tracing point P should trace out the axis of the given curve, and should coincide with or be parallel to the axis of the integral curve.

A small adjustment in the machine provides for bringing the radial bar in the set position so as to test the direction of the motion of the machine when moved along. The scale is fixed by adjusting the vernier slide arrangement to the required number of inches along E P.

Principle of the Machine.

The operation of integrating a given curve such as O P consists in merely tracing out O P, starting at O with the point P. The pen can be set at first to any axis parallel to the axis of the curve. In Fig. I. the pen is at O^1 when the point P is at O, so that the axis of the integral curve coincides with the axis of the given curve.

When the radial bar is perpendicular to A B, as in the set position, so also is the plane of the wheel w, no matter what the position of ff on $a b$ may be, so that if the machine be moved, keeping the radial bar in this position, the pen will trace out a line parallel to the axis of the curve or to the radial bar. This is the method of drawing the axis to the integral curve.

Suppose the point P to be kept fixed in the position in the figure and the machine moved along, the radial bar will keep its position relatively to A B and the direction of the wheel w will not change. Therefore the wheel w will follow a line in the plane of its circumference or parallel to the radial bar. If P be moved up or down during the time the machine is moved along, the radial bar will rotate about C, and the wheel w at any instant will be tangential to the curve traced out.

In the figure let $O^1 P^1$ be the curve traced out by the pen as the point P is moved from O to P. Then the wheel w is parallel to the

tangent P_1 to the curve at P_1. Let θ be the angle of inclination of this tangent. Then Tan θ is the $\frac{dy}{dx}$ of the curve P_1T at P_1.

But Tan θ = Tangent of angle Q C q

$$= \frac{Qq}{Cq} = \frac{PR}{EQ}$$

$$\therefore \frac{dy}{dx} = \frac{PR}{EQ}$$

Now E Q is the scale, say n, and is constant.

$$PR = n.\frac{dy}{dx}$$

i.e. the ordinate of the given curve is a measure of the first differential coefficient of the curve traced out. Therefore, the curve O_1P_1 is the integral of the curve OP.

APPENDIX B.

Properties of the First Three Integral Curves.

We have seen that any ordinate of the given curve is a measure of the differential coefficient of the integral curve at a corresponding point, i.e., at a point whose abscissa with reference to the origin of the integral curve is equal to the abscissa of the ordinate of the given curve.

In Fig. I. PR and P_1R_1 are corresponding ordinates of the given and integral curves respectively. And

Let $y = PR$ and $y_1 = P_1R_1$

Then $\frac{dy}{dx} = \frac{y}{n}$

$$\therefore y_1 = \frac{1}{n}\int y.dx \text{ or } ny_1 = \int y.dx$$

$\therefore$ (1) The ordinate of the integral curve measured in inches and multiplied in inches by the scale n, gives the number of square inches in the area of the integrated part of the given curve.

Referring to Fig. II. let AA be the given curve $y = f(x)$ with reference to the axes OX and OY.

Integrating AA along the axis of x then the first integral curve OA_1, or $y_1 = y.dx$ is obtained; Integrating OA_1 in the same way the second integral curve OA_2 or $y_2 = \int y_1 dx$ is obtained; OA_3 is the third integral curve.

Take an elemental strip of AA between the parallel ordinates bB and b_1 B_1 as shown. Then the area of elemental strip $= y.dx$. This area is represented by the horizontal distance between C and C^1 the intersections of the ordinates on the curve OA_1.

Call $OX = l$

Then the moment of elemental strip about XA is equal to $y.dx.(l-x)$. This is equal to the area of strip $CC_1 cc_1$.

Therefore the area of the first integral curve OA_1 represents the moment of the area of the given curve O A A X about the axis of X A.

This property may therefore be expressed generally.

(2) Any ordinate of the second integral curve represents the moment of the corresponding area of the given curve about that ordinate as axis.

The second integral curve may therefore be called a moment curve with reference to the given curve.

Then from the above property the ordinate b D represents the moment of the area O A B b about bB as axis, and the ordinate b_1 D_1 represents the moment of the area O A B_1 b_1 about b_1 B_1 as axis. It can be easily shown that if the tangents Dt and $D_1 t_1$ are drawn to meet the line X A in t and t_1, the ordinate Xt represents the moment of the area O A B b about X A as axis, and the ordinate Xt^1 represents the moment of O A $B_1 b_1$ about X A as axis. Therefore tt_1 represents the moment of the elemental area strip about X A as axis, i.e., $tt^1 = (l-x)y.dx$.

Now the area enclosed between the tangents D t and $D_1 t_1$, and the line X A is equal to $\frac{1}{2}$ tt^1 $(l-x)$ which is therefore $= \frac{1}{2}$ $(l-x)^2 y.dx =$ $\frac{1}{2}$ moment of inertia of area strip about X A.

Therefore, the area of the triangular element of the curve O A_2 is equal to half the moment of inertia of area strip about the axis X A.

So that the area of the curve O A_2 represents half the moment of inertia of the area of the given curve about X A as axis. Therefore,

(3) Any ordinate of the third integral curve represents half the moment of inertia of the corresponding area of the given curve about that ordinate as axis.

Now, at A_2 if the tangent to the curve A_2 G T be drawn to meet the axis OX in G.

Then $X\,G = \dfrac{XA_2}{\text{Tan}\,\theta} = \dfrac{XA_2}{XA}$

$$= \frac{\text{Moment of area OAAX about XA}}{\text{Area OAAX}}$$

= Distance of C. G. of area of given curve from X

Therefore,

(4) If a tangent be drawn at any point in the moment curve, it meets the axis in a point which gives the co-ordinate of the C. G. of the corresponding area of the given curve.

Note. [This tangent can be accurately drawn by the machine, as for instance A_2 G T is traced out by the pen, when the pointer is made to return along the line A parallel to the axis OX.]

Again the area of O X A_2 represents half the amount of inertia of the area O A A X about X A as axis. If the moment of inertia about any other axis is required, then a deduction must be made of (A) $(h^2 - h_1^2)$ where (A) = area O A A X and h_1 = distance of new axis from G.

Let h_1 in this case be Gb.

Then $(h^2 - h_1^2) = GX^2 - bG^2$.

Now $X\,A_2 = (A)\ G\,X$.

Triangle G X $A_2 = \frac{1}{2}$ (A) G X^2,

and triangle G b E $= \frac{1}{2}$ (A) b G^2.

$\therefore$ The correction (A) $(h^2 - h_1^2)$ is twice the area of triangle G X A_2 minus twice the area of triangle G b E. So that the area shown shaded represents half the moment of inertia of the area O A A X about the axis b B.

This shaded area can be represented by the ordinate of the curve A_3 A_4, which is obtained by tracing the line A_2T after having traced over O A_2 Thus in the figure $b\,e_1$ = area o b D.

$e_1 e_2$ = area D A_2 E.

$\therefore$ b $e_2 = \frac{1}{2}$ moment of inertia of O A A X about b D as axis.

Therefore,

(5) A_3 A_4 is a moment of inertia curve, any ordinate of which represents one half the moment of inertia of the *whole of* the given area about that ordinate as axis.

Discussion.

Mr C. S. Douglas, B.Sc. (Member) said he was familiar with this instrument, and was pleased that Mr Johnstone had laid its merits before the Institution. It was principally useful in ship calculations, and although he did not think that it would ever

entirely take the place of the planimeter and integrator, yet there were certain calculations to which it was specially applicable. Generally speaking, these were calculations the results of which it was desired to record in the form of curves. For a single operation, he believed the planimeter or the integrator was of greater use. In the pamphlet by M. Henry Lossier on the integraph on which M. Coradi had worked, it was stated that the first instrument of the kind was made in 1878—26 years ago. There were certain ship calculations not specially referred to by Mr Johnstone, but probably in his mind when he wrote the last paragraph of his paper, in which the instrument was of special use; such as launching calculations, and calculations for finding the sinkage and change of trim due to flooding, from which the proper spacing of watertight bulkheads might be determined. In these investigations it was of great use to have the area curve for each section of the ship drawn at its particular section, as by this means it was easy, at any trim, to obtain the displacement of each unit of length. A diagram prepared in accordance with the profile in Fig. 6, was of the nature required to perform these special calculations. He heartily agreed with what Mr Johnstone said with respect to the special use of the integraph in strength calculations. The labour of making a strength calculation was very great, and it had been made much less by the use of this instrument. The ordinary integrator in use in shipyards—No. I in Amsler's list—was not sufficient in span to take in a 20-inch diagram at one operation, and a 20-inch diagram was now very generally used for plotting the curves of weight and buoyancy, after the manner shown in the lower part of Fig. 6; of course, the integration would be performed along the length of the 20-inch diagram, and the distances between the wheels of the integraph should be such that the maximum ordinate of the bending moment curve would be on a sufficiently large scale. In making a strength calculation, the necessity for drawing down a load curve was entirely obviated by the use of the integraph, and the shearing force curve could be plotted if desired, after two operations. The integraph

Mr C. S. Douglas.

did not appear to him to be so useful for stability calculations as Amsler's integrating planimeter, and the method given by Mr Johnstone seemed to him to be a roundabout one. Following this method however, there was one part of it which he thought could be improved. Mr Johnstone showed, on page 203, how to obtain the heights of the centres of buoyancy for varying angles of heel, and for various percentages of displacement. For example in Fig. 14,

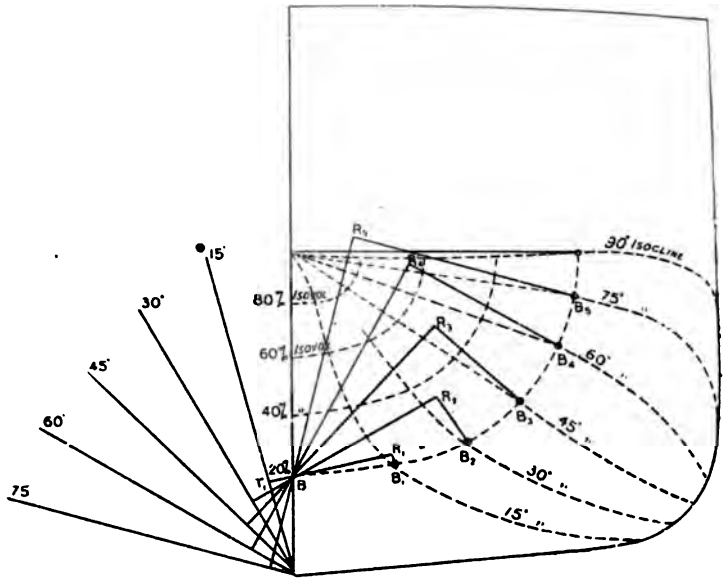

Fig. 14.

the heights above the keel, or lowest point of the bilge of B_1, B_2, B_3, etc., were obtained each for its proper inclination of the ship, and therefrom the values BR_1, BR_2, BR_3, etc., were deduced by drawing tangents at the known heights, sketching in the isovols, and checking by the fairness of the isoclines, as shown in Fig. 13. He (Mr Douglas) thought there was a liability to very great error here. What was wanted finally was the values of the righting arm of statical stability GZ. This was the difference of two quantities, and in itself small, but what might be a small percentage error in

obtaining the value of BR_1, BR_2, BR_3, etc., might be a large percentage error in the corresponding value of GZ. He suggested that the values of $B_1 R_1$, $B_2 R_2$, etc , in Fig. 14, should be plotted in a curve for each percentage of displacement wanted, as in Fig. 15. One of the uses of the instrument, was to obtain the curve of dynamical stability from a given curve of statical stability by integraphing it, and if the reverse operation were performed, the curve of statical stability would be obtained. The operation could be performed by tracing over the dynamical curve with the "recording" pen of the instrument and marking the statical curve as obtained at the tracing point. Similarly, here, if the "recording" pen were taken along the curve of values of $B_1 R_1$ the

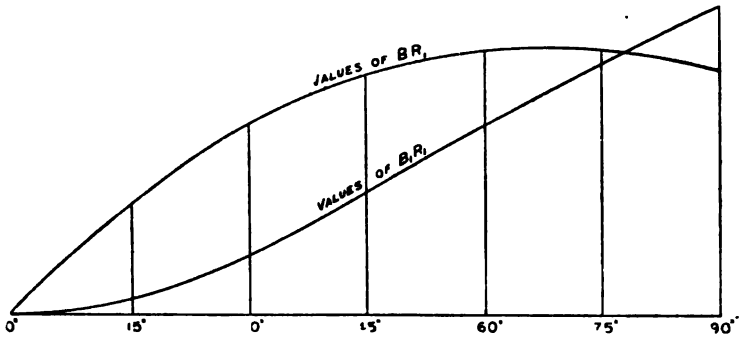

Fig. 15.

tracing point would follow a curve whose ordinates were values of BR_1, as shown in Fig. 15. This relation between these curves was well known in the theory of stability. Then by means of known rectangular co-ordinates the position of B_1, B_2, B_3 etc., could be set off from B for 20 per cent displacement, and by repeating this work for the various percentages of displacement, correct isoclines and isovols could be drawn. The earliest type of integraph was somewhat different from the one illustrated in the diagram, although the principle was the same. The former consisted of a rectangular frame with four milled wheels, and he

Mr C. S. Douglas.
should like to remark that most of the integrators and instruments of this kind made by M. Coradi depended upon the milled wheels for rectilinear motion, whereas in the instruments of some other makers this motion was obtained by the use of a long bar acting as a guide rail. In this respect Coradi's machines were very much more compact. The latest types were as illustrated, and there were two sizes. Some shipbuilding firms had been purchasing these instruments lately, and he had been asked which was the most useful for a shipbuilder to possess. He was of opinion that the large size was the correct one, because it had a span of 52 centimeters, or 20·8 inches, while the smaller one had only a span of 27 centimeters, or 10·8 inches. From the diagram of the machine it would be seen that a long bar extended over the top and carried a trolley arrangement. That was called the radial bar, and in one instrument which came under his notice, it had given some trouble by getting out of shape. At the lower end of this bar, in the latest type of integraph, a balance weight had been provided to counteract some of the weight of the mechanism, a difference from the one illustrated in Fig. 1.

Mr W. H. RIDDLESWORTH, M.Sc. (Associate Member), said he should be glad to hear from Mr Johnstone about the accuracy with which the moment to alter trim could be got by the method that he indicated in the body of his paper. He should also like to know generally regarding the accuracy with which the integraph worked. It seemed to him that the scale on which the result was read was very small. In the case of ship calculations, a very short line would represent the whole displacement, or whatever was being calculated, and the accuracy with which that short line could be measured was, of course, limited. Mr Johnstone in his paper said, "If it can be said that the labour of constructing an 'equivalent girder' is less than the labour of calculating arithmetically the moment of inertia, then this method is to be recommended." The crux of the whole matter lay in the clause "If it can be said." In the course of his remarks Mr Luke said he would have preferred to

have seen a direct proof that the first derived curve was the integral of the given curve. Such a proof could be built up in the following manner (avoiding, too, incidentally, the notation of the calculus):—In Fig. 16,

Let $O_1 P_1 A_1$ be the given curve, and $O_1 N_1$ its axis.
$O_2 P_2 A_2$ the first derived curve, and $O_2 N_2$ its axis.

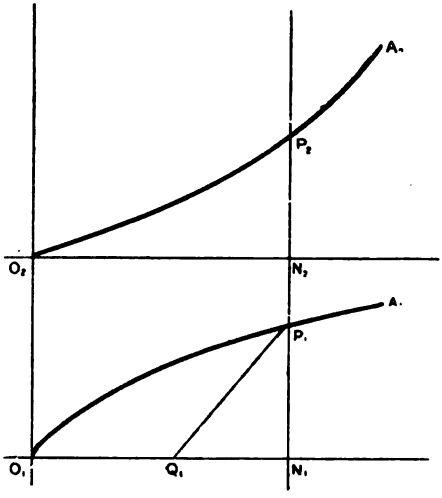

Fig. 16.

Premising by the explanation that, the instrument caused a pencil, constrained to lie on a line through P_1 perpendicular to the axis, to move in a direction parallel to $P_1 Q_1$, where $Q_1 N_1$ was any convenient constant length—Then, if the abscissa $O_1 N_1$, increased by unity, whilst the ordinate $P_1 N_1$ remained constant, the added area became $P_1 N_1 \times 1$; or the rate of increase of the area $O_1 P_1 N_1$ was $P_1 N_1$. Now, as the pencil at P_2 moved in a direction parallel to $P_1 Q_1$, the increase in the ordinate $P_2 N_2$ for unit increase in $O_1 N_1$ (or $O_2 N_2$) was $1 \times \frac{P_1 N_1}{Q_1 N_1}$, or the rate of increase of $P_2 N_2$ was equal to the rate of increase of the area $O_1 P_1 N_1 \div Q_1 N_1$, so that $Q_1 N_1 \times$ difference of ordinates to P_2 at

any two positions was equal to the area between the original curve and the axis lying between corresponding ordinates. It might be noted that given a curve drawn on squared paper (or even closely and accurately ruled paper)* it was by no means difficult to draw the integral curve, using an instrument no more complicated than a parallel ruler in its simplest form, namely, a straight edge and a set square. In Fig. 17,

Let $O_1 A_1$ be the given curve.

$O_2 A_2$ the first derived curve.

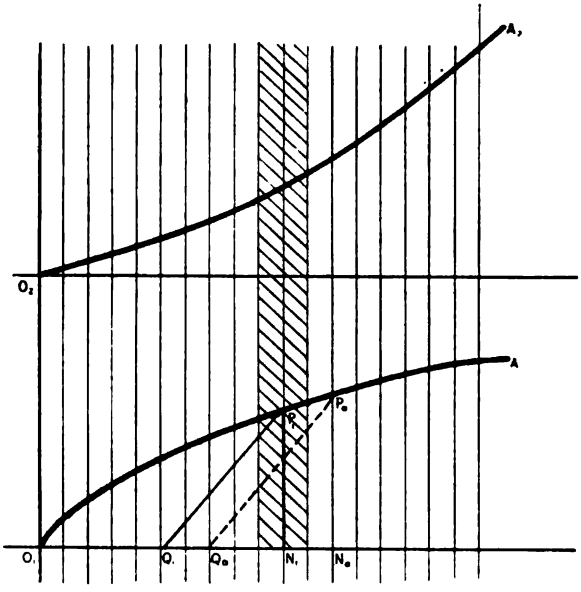

Fig. 17.

The derived curve was drawn as a series of straight lines, each spanning two of the spaces between the lines on the squared, or ruled, paper. The direction of each of these straight lines was obtained in the following manner:—Take P_1N_1 to be an ordi-

* The closely spaced lines at right angles to the axes of the curves were merely indicated in Fig. 17.

nate of the given curve at the middle of one of these pairs of spaces, and measure off $N_1 Q_1$ any convenient length (this became the scale constant); a double set of numberings along the axis was most convenient for this. Join $P_1 Q_1$. The short section of the derived curve belonging to that portion of the original curve spanning the two spaces mentioned above was drawn parallel to $P_1 Q_1$. Repeat for the adjacent pair of spaces throughout the curve, drawing each straight line portion of the derived curve from the end of the preceding one. In practice the line $P_1 Q_1$ was not drawn, the parallel ruler being merely set along $P_1 Q_1$. He might mention the fact that a curve of loads of average complexity had been integrated by this method, giving a result of very satisfactory accuracy, and with an amount of labour by no means excessive.

Mr W. J. Luke (Member) remarked that it was a long time since he first became acquainted with the name of Abdank-Abakanowicz, and those who were interested in mechanical integrators would find a very interesting paper which was read before the Institution of Civil Engineers by Professor Hele Shaw,* in which all kinds of mechanical integrators were dealt with, and the principles gone into with considerable detail. M. Abdank-Abakanowicz, who was one of the contributors to the discussion on that paper, exhibited a planimeter of his own design and said that he had been engaged in making a machine to draw the curve which was the integral of some fundamental curve on which one wanted to operate. He also said that "since 1878 he had constructed machines to solve this problem, and he had brought them forward on various occasions." One great advantage of the integraph over such an instrument as the planimeter was, that it recorded continuously, and in that he fancied its greatest benefit would ultimately be felt. Anyone with a planimeter obtained a final result which he read perfectly or imperfectly from the wheel, but if this result required checking the operator had to go over all

* Minutes of Proceedings of Institution of Civil Engineers. Vol. lxxxii p 75.

Mr W. J. Luke.

the work from the beginning; whereas, with the integraph a more or less continuous record of the work done could be preserved, and anyone who had occasion afterwards to check, had his work considerably eased. He quite agreed with Mr Douglas' recommendation that anyone who intended to buy an integraph should buy the larger machine. The large machine was big enough for ordinary use, and at the same time was not so large and heavy as to make it unwieldy. As the paper stated, however, it was necessary to have a good firm level table for operating upon. He had already expressed his regret to Mr Johnstone that he had not exhibited his integraph. If there was any desire on the part of the members present to see the integraph, he would be very pleased to show one at the next meeting. At page 196 it was stated that "This type will integrate in one operation a curve whose maximum ordinate on either side of the axis does not exceed 10 inches, and it will integrate an area not exceeding 120 square inches." It seemed to him that that sentence ought to be a little amplified, because it might be supposed that one could not do anything more than integrate 10 inches on one or the other side of a line as shown in Fig. 3; but if the machine was set a bit sideways the whole 20 inches range could be taken upon one side of the datum line. The datum line for the integral curve would in that case slant more or less across the paper. For his own part, too, he should be inclined to say that the area which could be measured was something more nearly 150 square inches than 120. That, however, was simply a matter for individual judgment as to how far any one would like to work the machine to its extreme limit. In connection with the last sentence on page 196, he congratulated Mr Johnstone upon the fact that he had not been perverted when he used Tchebycheff's rule. When some years ago a paper was read before the Institution upon the use of Tchebycheff's rules,* it was shown, or was attempted to be shown, that good results were obtained with very few ordinates. He observed that Mr John

* On M. Tchebycheff's Formula, by Prof. J. H. Biles. Vol. XLII., page 176.

stone was not led astray in that direction. If any one studied Figs. 3 and 4 he would see that the curves in Fig. 4 had been rectified, if he might say so, because the curves of the fore body were given on the right hand side of the axis, and the curves for the after body sections were given on the left hand side of the axis, but in taking them straight from the machine the reverse of that was the case. He merely mentioned this because he thought he had noticed that in the subsequent work in connection with stability the curves were laid down one after the other as they were taken off the machine, namely, alternately to the right and left of the axis. He was inclined to agree with Mr Douglas that the methods of attempting to get curves of statical stability from dynamical curves would not give very good results. Perhaps he ought to say that he had never succeeded in getting good results from them, though others might succeed where he had failed. Once he had been very much smitten with the attempts to perform stability work by means of a planimeter, a parallel case to the work done in the paper, as he took the integraph as being only a very good sort of planimeter. In such work, to determine the value of the arm of dynamical stability, one quantity of substantial magnitude was subtracted from another not greatly different. The difference that was wanted was a small one, and if the percentage errors were trifling in the two initial quantities, and in opposite directions, one could be considerably out, and have a considerable percentage error in the difference. Whether or not, as time went on, the integraph would be successfully used in the way mentioned in the paper, or with the modification which Mr Douglas had suggested, he did not know; time alone would tell. With regard to what Mr Johnstone said regarding the reliability of the work done, the statement that the machine required careful handling to produce good results should not be regarded as being any discredit to the integraph. He had had the advantage of working with no less than five different integrators, and his experience was that they all required careful handling, as also did the integraph. Quite recently he had seen some very remarkable

Mr W. J. Luke.

results which had been got with an ordinary planimeter. Tracing twice round a rectangle, successive results could not be obtained within 5 per cent of each other. The machine worked well enough, but had got out of adjustment in some way which was not easily noticeable to the ordinary observer. With regard to what was observed with respect to setting the machine, he had only to remark that he had found it rather difficult to set it to his own satisfaction, but that again might be a matter of personal opinion. Regarding its accuracy he might say that recently in drawing a curve of sectional areas of a large ship, with which he was dealing, he had taken off the displacement at one water-line and compared it with the result that had been obtained by figures on a displacement sheet. It was not a specially prepared curve got off by the integraph, neither was there any special care taken in doing the work on the displacement sheet,—no more care, that was to say, than was ordinarily used—and the two were within $\frac{1}{500}$ part of each other. That was a degree of accuracy which he thought one could not hope to better. Whether it was specially good or specially bad he could not say, but it was just one particular case which he had got. He was perfectly satisfied with the machine, and felt he had done a right thing in acquiring one. He did not think that it would displace the ordinary planimeter or the integrator, but it was certainly a very useful machine to have and a machine which did very good work. Referring to the opening paragraph of the paper, Mr Johnstone might be asked whether he would favour the Institution with his opinion on the utility of the machine as compared with the integrator and the planimeter as they were commonly known.

Prof. Archibald Barr, D.Sc. (Member of Council), was surprised to hear what Mr Luke had said regarding the inaccuracy of the planimeter. He was one of those who had always held that it could be worked to an extreme degree of accuracy, and what was wrong in Mr Luke's case he did not know. The planimeter could be worked to something like one part in two thousand. How

Mr Luke could get anything like five per cent. wrong he had not the slightest conception.

Mr LUKE said in working the planimeter he had always insisted that upon the drawing to be measured a large rectangle should be drawn, and the constant found for a particular setting by actual trial upon the same paper on which the drawing was made. It was generally impressed upon the operator not to be content with going round once, but to go round two or three times to make the constant determination absolutely certain. It was in one of these cases that the peculiar thing to which he had previously referred was discovered. He could only suppose that the machine had fallen, or that some such accident had taken place. Of course the machine was at once sent away to be adjusted, and, so far as he knew, they had not since had any peculiarities in its movements.

Mr JOHNSTONE (in reply) said he would like to thank the speakers for the manner in which they had spoken about the instrument. Those who had criticised the paper had had some experience in the use of the machine and he thought their remarks would be useful and would explain some parts of the paper which might have appeared rather vague. A good many of the calculations had only been done for the first time and the methods employed were perhaps capable of improvement, but, as Mr Luke had said, time would prove what the machine could do. Mr Douglas referred to certain other ship calculations that could be simplified by using the integraph. A body plan of integrated sections such as in Fig. 4. shortened the work of launching and flooding calculations considerably. In flooding calculations he had found it easier and quicker to get the position of the new water-plane for the damaged condition of the vessel, by a trial process, (a diagram similar to the profile view of Fig. 6., had to be used and buoyancy curves constructed for the arbitrarily chosen position of the water-line), than to calculate by the ordinary method the amount of sinkage and then the amount of change of trim. The latter operation was rather involved as it necessitated the determination of the moment of inertia of the damaged water-

Mr Johnstone.

plane. Mr Douglas did not think the method of drawing tangents to the isovols and then fairing up was sufficiently accurate, for obtaining isoclines. He suggested a method which involved differentiating the curves of B_1 R_1 values. He had not tried that method but he was of opinion that the operation of differentiating such curves was not likely to lead to more accurate results than the method indicated in the paper. He had tried to differentiate various kinds of curves by the machine and found that only very fair curves gave successful results. The process of fairing up isoclines which had been obtained from "isovols," (it did not matter which method was used), eliminated small errors and tended to make the curves more nearly correct. In comparing two or three set of isoclines obtained by the above method, with isocline spots from careful integrator readings, he found that the curves agreed with most of the spots and those spots that were in disagreement would have made unfair curves, and concluded that the faired isoclines were correct enough for all practical purposes. Had the integrator spots been faired they would have given identically the same curves. Mr Riddlesworth had given a short proof of the derived curve being the integral of the given curve. To anyone who understood the method of differentiation, the principle of the machine would be seen at once. That led him to give the proof as in the paper. Mr Riddlesworth called attention to the statement viz., "If it can be said that the labour of constructing an equivalent girder is less than the labour of calculating arithmetically the moment of inertia, then this method is to be recommended." This statement was one which should be preceded with an "if," as he had often heard the above point disputed. He believed that it was quicker in the majority of cases to calculate the value of the moment of inertia, but he preferred to construct an equivalent girder for the purpose of judging the effect of neglecting certain parts of, or adding more material to, the longitudinal structure. An equivalent girder and a diagram of the nature of that in Fig. 8. were also useful in a shearing stress calculation. The accuracy of the work, as Mr Riddlesworth

mentioned, was limited by the final scale. In all the ship calculations he had made and seen made with this machine, the final scale was quite large enough for all practical purposes. In displacement calculation for instance, the ordinates could be measured from a small scale body plan, and if the sections be traced over with every care by an instrument then he should say that the work of the machine was more correct than arithmetical rules for integration. Of course, if the ordinates in the displacement sheet calculation were taken from the full size measurements of the drawing loft the arithmetical results might be more correct. It might have been noticed that the displacement curve, constructed according to the first method described in the paper, was not limited to any final scale. Each ordinate was a function of the sum of the corresponding ordinates of the integrated sections and therefore had to be figured out. The accuracy therefore depended on the accuracy of the integrated sections. Suppose the original body plan to be drawn to a $\frac{1}{4}$ inch scale and the sections integrated to a scale of 6. Then one inch of ordinate of the integrated sections represented 48 square feet (both sides of ship taken into account). Supposing that the length of ordinate could be read correctly to a $\frac{1}{50}$ part of an inch then the reading was reliable to one square foot, approximately. Mr Luke referred to the value of the integraph as a working machine compared with the planimeter and integrator, and gave some of the results of his experience with the latter machines. For many ship calculations such as those indicated in the paper, the integraph was a more suitable machine than the planimeter or integrator, but for single operations such as finding the area, or moment, or moment of inertia of a given curve, the integrator could be more conveniently used. The integraph and the integrator possessed the same accuracy because the operation was the same in each, viz., tracing a line by guiding a movable pointer over it. Mr Luke's experience with the integrator was that it was liable to get out of order at times. Such was also his experience and he had found the integraph also to get out of order, but the cause of the error in the integraph was not far to seek and

Mr Johnstone.
was easily remedied Granting, however, good working conditions and the machines in good order the accuracy was the same for the integraph as for the integrator. It was a necessity in using these machines to have a means of testing them, or of checking the result. The integraph was used generally to integrate a series of curves and had thus to be driven backwards and forwards along the axis. If the paper were loosely pinned to the drawing board then some trouble might be experienced by the axis shifting. Hence the necessity of having a level board to which the paper could be firmly pinned down. He thanked those who had taken part in the discussion for the favourable and helpful way they had spoken.

The CHAIRMAN (Mr James Gilchrist, Vice-President) said the Institution was much indebted to Mr Johnstone for bringing forward a paper on such an interesting instrument as the integraph. He was not prepared to say anything particularly on the merits of the integraph, as it was really an instrument with which he was not familiar, but in reading over the paper he could see that it must be a very valuable addition to the instruments that were used by shipbuilders in their calculations. He would ask the Members to accord a very hearty vote of thanks to Mr Johnstone for his paper. He would just like to take Mr Luke at his word as to exhibiting the instrument, and perhaps Mr Johnstone could give some further explanations regarding its working.

The vote of thanks was carried by acclamation.

At a meeting of the Institution held on 3rd May, 1904, Mr W. J. LUKE, in the enforced absence of Mr Johnstone, exhibited two integraphs and explained their properties and action to the meeting. He said at the last meeting he was asked concerning the accuracy of the machine, and he might now say that he had not had a sufficiently wide experience of the integraph to see whether or not its accuracy could be relied upon. Mr Johnstone had told him that a machine of the form exhibited

with which he (Mr Johnstone) had had experience gave considerable trouble simply because the radial bar did not keep straight. He would point out that if an apparatus of a rather delicate character was not taken care of it could not be expected that it would do its work properly. A question had been asked by one gentleman as to whether the records got were sufficiently large to be of practical use. As the machine was set, the area curve multiplied by 8 gave the area integrated in square inches, and that, he thought, was large enough for practical use, and on quite as large a scale as area curves need be in anything short of very delicate work. The second machine shewn was of the earlier type with which he was not quite so familiar. Its range was not so wide as that of the later type, but of course the general principles of its action were practically the same.

SOME MODERN APPLIANCES CONNECTED WITH RAILWAY CROSSINGS AND POINTS.

By Mr Owen R. Williams, B.Sc. (Member).

(SEE PLATES XVII, XVIII, AND XIX.)

Read 26th April, 1904.

Of late years great developments have been made in the various branches of railway engineering, notably in locomotives, in carriage building, and in signalling by pneumatic and other powers; but in the permanent way, except in the strengthening of the rails and their fastenings to meet the heavier loads, very little change has taken place; and it is consequently intended in this paper to describe and consider some appliances regarding railway points and crossings, to state the reasons why these appliances are wanted, the qualities they ought to possess, and to show in how far they possess these necessary qualities.

Diamond Crossings.

When one line crosses another a diamond crossing is formed. This complete crossing consists of two obtuse-angled crossings or elbows, and two acute-angled, or, as they are usually called, V-crossings. Fig. 1.

In the acute-angled crossing, Fig. 2, although the wheel is unsupported for a short distance at one side, a complete guide and support is provided at the other, and the crossing can consequently be made strong enough to secure perfect safety and easy maintenance.

In the obtuse-angled crossings, Fig. 3, however, there is a space (varying with the angle of the crossing) during which the wheels are only partially supported, and during which the flanges have

no rail by which they can exercise their guiding functions. This space or gap in a 1 in 8 crossing, is 3′ 3″; and in a 1 in 10·5 crossing, is 4′ 4″. The following table shows the gaps of corrresponding angles of crossings :—

TABLE OF GAPS

Angle of Crossing.	Length of Gap.
1 in 7	2′ 10⅛″
1 ,, 8	3′ 3″
1 ,, 9	3′ 8″
1 ,, 10	4′ 1″
1 ,, 11	4′ 5¾″
1 ,, 12	4′ 10½″
1 ,, 15	6′ 1⅛″

During the gap, as the flanges can give no guidance, the criterion that the wheels will take the right side of the diamond point is solely that the vehicles will continue to move in the same direction as when entering the gap. In the case of a straight road, they will undoubtedly do this, provided no other influences are imposed; but in the case of a diamond crossing on a curved road, it is difficult to be certain in what precise direction the vehicles will continue to move, and consequently flat crossings, especially on curved roads, are the most frequent causes of accident on railways.

Let us suppose that any wheel of a train, say one of an oscillating vehicle, after leaving the first diamond point, trespasses only slightly out of the straight path, then it will inevitably hit the wing rail's running edge, or the check rail at or before the elbow;

this again alters the direction in which the wheels will travel, and will ill-conduce to their taking the correct side of the points.

The most frequent derailments are probably caused by goods trains, consisting of wagons having wooden buffers, being stopped on a diamond crossing on a curved road, and then pushed back. Consider a wagon actually at the obtuse angle. As the inside buffers will touch first, the wagon will get a push from the one corner, and therefore will tend to move in a direction at an angle to the line of the road, and in consequence will probably take the wrong side of the diamond points.

Referring to Fig. 4, it will be readily seen that the gaps between the diamond points A and A^1 are the critical places of the crossing, there being a rail at one side only to support the wheels between the diamond points and the angle, and the possibility of accidents may be attributed to the following causes:—

1. The guiding function of the flanges is greatly impaired, or ceases entirely.
2. The treads of the wheels are provided with a full rail head support at one side only; consequently the support is diminished.
3. As the clearance space between the points is wider than in the ordinary case ($4\frac{1}{4}''$ instead of $1\frac{7}{8}''$), the flanges lose their guiding properties, as they cannot touch the edge of the rails.

To eliminate these causes of uncertainty, and at the same time provide a crossing strong enough to ensure easy maintenance, is the object in view.

There are four possible methods of dealing with the case of a troublesome diamond crossing. To substitute for the diamond crossing:—

1. Two pairs of facing points.

Fig. 5 shows the substitution of facing points, which means a complete relaying (to an existing crossing), and as the points have to be detected and provided with lock-bars, special levers

are required in the signal cabin. The arrangement costs several hundred pounds, and sometimes cannot be done on account of confined space.

2. A "flying" crossing or junction.

Such a crossing is formed by one line passing under the other, and is only done to allow of a quickened train service.

3. To alter the crossing to the New South Wales type.

The New South Wales system, Fig. 6, consists in putting in the obtuse angles two pairs of short switches, working in opposite directions and connected by one rod. The intention of this is to provide a continuous running rail edge, and continuous support, and therefore cures both causes, 1 and 2. The apparatus, however, has the following disadvantages:—

a. Placing four finely planed switches such as are required into such a confined space, renders the crossing very weak, and is therefore against the object in view.

b. As the switches come under the heading of "facing points," which have to be detected, and require special levers in the cabin, this arrangement is very costly.

4. To equip the existing crossing, with the "protectors" invented by the late Henry Williams.

In the Williams' protector, four treadles are introduced into the existing crossing which does not require to be relaid in any way. The action of these treadles is to reduce the undue clearance space to the standard, and consequently to provide a true guidance to the wheel flanges. This cures cause No. 3, and also provides for cause No. 1, and as the crossing is not weakened in any way, but left in the original solidity, cause No. 2 becomes negligible.

The four steel treadles, A, A^1, B, and B^1, Fig. 7, differ from all other types, in that they are moved vertically instead of horizontally; therefore, they do not come under the Board of Trade's definition of a "facing" point. They are fitted into the clearance spaces between the check rail and the running rail. They are

fulcrummed on a special bolt, which is fixed to the check rail, and in a sliding nut which fits close to the web of the running rail; this nut can move in the line of the rail, and therefore, if one rail "creeps" ahead of the other, the fulcrum pin is not broken. The four treadles are raised and lowered by a special "arm" working in a slot in each treadle; the arms are affixed to two "rocking" shafts, which are revolved through about 90 degrees by a piece of point rod, this rod being part of or joined to the rod which works the points controlling the way through the crossing. No extra lever is required in the signal cabin.

The treadles are operated in the following manner:—

For the main line, A and A^1 will be raised, and B and B^1 will be lowered.

For the branch line, B^1 and B will be raised, and A and A^1 will be lowered.

Consider a vehicle passing from right to left on the main line; the flanges, on arriving at YY^1, pass over the top of the treadle B, but do not touch it, as it is 2 inches down, but they are guided on the other side by treadle A^1. On arriving at XX^1, treadle B^1 is down out of the way, and treadle A entirely blocks up the wrong way, thus allowing the flanges no option as to which side they will take, but forcing them to go to the desired side of the points.

It will be seen that the treadles do not support the weight of the vehicles, as it would be impracticable to make a vertically moving treadle strong enough to take the weight of a locomotive. On the other hand, the crossing still has its original strength, and, therefore, no further support is necessary.

These protectors have the following advantages over other systems:—

1. They are perfectly efficient, derailments being impossible (this is borne out in practice).
2. They are less than $\frac{1}{10}$th of the cost of other systems.
3. They can be fitted into existing crossings in about four hours.

4. The crossing has not to be relaid or altered in any way.

The efficiency of the protectors is proved by the fact that there are about 100 of them fitted, in all cases to "troublesome" crossings, where derailments were formerly as frequent as three per week, and since the time of equipment (from three years) derailments have entirely ceased. Should a driver, by disobeying the signal, run an engine over the crossing when the protectors are set for the opposite road, something will give way, and the protectors (till repaired) will be put out of action; this is important, as if they did not give way the engine would run off the road, but when set for the correct way a derailment is impossible.

These protectors have been fitted to crossings as flat as 1 in 15. The rule of the Board of Trade is that in new work no crossings flatter than 1 in 8 are allowed, but new crossings up to 1 in 10 have been sanctioned when fitted with these protectors. Engineers having to plan crossings in confined spaces will appreciate this.

On examining a treadle from a set of protectors that have been in use for some time, the following will usually be noticed:—The points of the treadle and the working heel will be quite black; but there is a bright part on the side half way between the point and heel. This brightness is caused by rubbing and knocks from the flanges, and as the flanges can only knock the treadle when they begin to stray from the correct path, each knock (if unchecked) would probably have been the means of a derailment. Some idea of what these protectors have saved can, therefore, be judged.

Hand Levers for Points.

There are two classes of levers required for hand-worked points:—

1. A lever that will hold the points for either way as required; this is the type generally used in shunting and goods yards.
2. A lever that will hold the points always in the one position for the main siding, and has to be held over for the other road.

For both types any first-class lever should possess the following points :—

1. It should absolutely prevent the switches from "sticking" when trailed or otherwise.
2. It should be reasonably easy to operate, so that shunting may be done quickly.
3. It should have a still handle when the points are trailed, as a moving handle is very dangerous to shunters.
4. It should give as little obstruction to the feet as possible.
5. As regards wear, it should be as "easy" as possible on the switches and connections.
6. It should be strong and durable.

The simplest form of hand point lever is the plain straight lever handle fulcrummed in a cast-iron base fixed to the sleepers. This lever generally has a large weight on the top end to make it fall to the required side, at the same time pushing the switches into the required position.

As an improvement on this type a crank or a cranking device is put into the lever, which enables the motion of the handle to be parallel to the line of the rails. This is now a Board of Trade regulation, as when one of these levers is trailed the flanges cause the weight and the handle to move up and down; consequently, if a shunter holds one of these handles which is moving at right angles to the rails, it will tend to pull him under the train; but if the handle works parallel to the rails, it will only pull him along side in the 6-feet way. Swinging handles of any kind, however, are a great objection, as the shunter runs a great risk of getting hit on the legs, and, as the moving weight is usually from 56 to 80 lbs., the effect is not inconsiderable.

When a vehicle trails a pair of points, that is to say, in going from B to A, Figs. 8 and 9, at the point X the flanges of the wheel have to force open the switch, and it is the duty of the lever to close it again to the stock rail after the vehicle has passed. This

is the object of the weight, and if the weight does not properly close the switch, the points "stick" in a half-way position, and a vehicle coming from A will go to neither B nor C, but will get derailed. Such derailments happen in very large numbers, and as the average cost of a derailment is £5, they are a great source of expense, besides being very inconvenient at busy places.

There are many designs of weighted levers, but in all cases wherein the trailing of the point moves the handle, the weight cannot be made large enough to absolutely ensure the switches from "sticking," as, if it is, no man can work the lever. The nearer to the vertical that the weight is moved by the flange, the effect of the weight (tending to close the switches) becomes the less, and in the vertical position it has no effect whatever, so that no matter how large the weight is, it cannot prevent the switch "sticking."* Moreover, as the flanges when trailing the points keep the weight swinging about, there is an excessive amount of wear in the lever connections, and, most important of all, on the switches themselves.

Spring Design Switch Levers.

The spring switch levers, Figs. 10 and 11, differ in principle from all others in that, although the handle has full control of the points, the points have no control over the handle. When the points are trailed, the handle remains perfectly still, and after each wheel has passed, the spring instantly forces the switches back to the original position, as indicated by the handle. This still handle means much greater safety to the shunter, as with it he cannot get pulled under or alongside the train, nor can he get hit by it.

In the "Reversible" Lever, Figs. 10 and 11, the handle moves a malleable iron plate in which is a diagonal slot; in this slot moves a ring fixed to a cradle containing a spring, the spring being fixed to the rod which goes straight to the connection of the

* "Sticking" switches are most prevalent when the slide chairs are dirty, or covered with sand and snow.

switches. The springs used in the levers are capable of being compressed solid without taking any set, but their working range is only about half of the full range. Fig. 12 shows a stress strain diagram from tests made by the Great Western Railway Company at Swindon. When the springs are fitted into the lever they are compressed 1¼", the compressing force being 2 cwts., and when the switches are trailed the spring is compressed a further 1¼" when the flange is at the point end of the switch, and 2½" when the wheel is at the heel end; the spring is therefore compressed 2½" in the one case, and 3¾" in the second, and the force tending to close the switch varies from 4 to 6 cwts. As this force acts directly on the switches, it is impossible for them to "stick," and with these levers derailments from "sticking switches" are unknown.

Comparing this spring design lever with the weighted type it has the following advantages:—

1. It is easier to work, there being no large weight to lift; as a result, shunting can be done quicker.
2. It entirely prevents derailments from sticking switches.
3. When trailed the handle remains still.
4. It presents practically no obstruction by which shunters may be tripped.
5. The cushioning action of the spring preserves the adjustment of the connections, and greatly reduces the wear on the switch blades. The maintenance is, therefore, less, and as there is no swinging weight, the lever itself lasts several times as long as the weighted type.

The general method a shunter adopts with a weighted lever is to raise the weight, give it a push and pass on, trusting to the weight to push the points over. This it will do, but as in falling it gathers momentum, the weight generally comes down with such a force as to cause it to rise up again once or twice before settling down to the proper position. As the weight bumps up and down,

the switches open and close a small amount, and if a vehicle is approaching "facing ways" it is possible for a flange to get into this opening and split the points. In the spring design the handle is pushed over, and this opening and closing cannot occur; also there is a small half-lock at each end of the slot in the plate which secures and locks the points in the correct position until moved again by the handle.

For points which have to stand always set for one way, the "one way" spring switch lever is used. Figs. 13 and 14.

In this lever the handle moves one end of a right-angled crank against a tortional spring, the other end of the crank being connected direct to the switches. This lever ensures that the points stand set for the main line. If a train is to be sent into the siding the handle is pulled over and held in this position till the train has passed, when on loosing the handle the spring forces the points back to the position for the main road. A curved handle is here of advantage, as a shunter can pull the points over and either sit on it or put his foot on it till the train has passed, thereby saving his muscles.

Figs. 15 and 16 show a combined switch lever and point indicator. This appliance puts the points into the required position and also indicates for which road they are set; thus during the day, the arrow points to the direction the train will proceed in, and for night work the lights being of different colours, and also having the number of the siding on them, amply show for which way the points are set. As a further object of safety, if the points have not been put properly home, say due to some obstruction, the arrow will show this by pointing in neither direction, and the lamps will also indicate this by showing both colours.

Another design has a large red target standing up for the one way and falling down for the other, the coloured light motion being the same as before. This is on the lines of a standard ground disc signal which the indicator supercedes when used as a point indicator.

In some of the colonies signal cabins are dispensed with on

branch lines, and a hand worked lever is used to move the points for passenger trains, the lever being connected to a ground disc signal. The combined lever and indicator does the work of both, takes less than half the fitting, saves connecting rods, and is much cheaper in first cost. In principle it is better than the two single appliances, as an indicator should be as near and as directly connected as possible to what it indicates; the indicator being actually part of the ground lever fulfils this condition.

Discussion.

Mr GEORGE W. REID (Member) thought this paper one of considerable interest to all Members of the Institution, either as engineers or travellers by rail. It was certainly complimentary to railway engineers that, as Mr Williams remarked at the commencement of his paper, very little change had been made on the permanent way since railways started, beyond making the metals heavier, which, however, was a very important point. It struck him as somewhat strange that Mr Williams had not referred to the point blades as being the source of danger. It had been his duty to investigate many derailments, which necessitated passing over crossings on foot, and all his experience went to show that if a train passed over the point blades it was safe for the rest of the junction. The diamond crossing which Mr Williams referred to did not obtain in single line working. In single lines the crossing shown in Fig. 2 was adopted. Mr Williams did not say that there was any great risk in running over it, although an element of danger did exist. In practice all main lines were made straight and the branch lines were taken off at an angle, and, as Mr Williams pointed out there was no danger of leaving at the point, so long as a train ran on the straight. Branch traffic was usually run at a slower rate of speed, and the throw-off was always to the branch. If engineers did not discover any difficulty there, he thought they were quite right in not introducing anything additional. All good engineers knew, the less the number of parts in any construction the better,

provided always that they felt sufficiently safe with what they had got. When a train went on to a branch line it ran over one crossing, Fig. 2, and one of those marked A, Fig. 4, provided it was going to the right hand side; but if it went to the left hand the train was not taken over the crossing marked A, so that when a branch struck off a main line to the left there was none of those objectionable crossings to pass over. There was one on the right turn out rail, but it was a long line and there was sufficient space always to make a long check rail. The long check rail steadied the train before it could reach this particular point. He thought the distance between the two points was 2 feet 8 inches. One half of the 2 feet 8 inches was without a guide, and taking the half at 1 foot 4 inches, there was an equivalent to a check rail for about 2 inches in length, so that if there was any likelihood of oscillation it must confine itself to something like 15 inches. Anyone looking at the crossing would see the almost impossibility of a wheel changing from a straight line to turn a corner in such a short distance, and he had never found that derailment took place at that portion of a main line. In saying this he did not speak of sidings. Sidings were put into goods yards in the most profitable positions. But engineers sometimes had not sufficient room, and there might be several sidings put into a goods yard which were objectionable, but that was only a matter of shunting and the shunters seeing that special precautions were taken. He did not know whether in that case it would be advisable to put in extra "treadles," but if so it meant that they must either be connected with the point rod or there must be another rod to work by. If there were two separate rods, the shunter would certainly object to pull two handles instead of one, and if both rods were attached to one lever it would perhaps be too heavy. One way by which a solution could be arrived at would be to hear a yardsman's opinion on it,—and he believed in having the opinion of a yardsman on a practical question of this kind, With regard to levers, the present lever was very convenient. When a shunter tipped up the end of the lever, it went over to the reverse side. Nothing

could be quicker or smarter than that, and the turn over of the weighted lever did not seem to incommode the shunter at all. He did not like a spring. If the driver of an engine could be assured that the point-blades were close he would go on ahead, but if he was not sure he was timorous. The objection to the spring was that it was not seen. It might be working all right, but at the same time it might have lost some of its elasticity or it might be broken. There was nothing that gave a driver more confidence than to know that the thing was as represented, and if the indicator as well as indicating that the line was clear indicated whether the point blades were close or not they would be of great service. He had not been fortunate enough to see the model shown by Mr Williams, but if the indicator were connected with the handle, it was connected with the wrong part. All indicators ought to be connected with the point blades.

Mr JOHN RIEKIE, (Member) said his experience was pretty much the same as Mr Reid's. With respect to improvements in connection with railways, he would go further than Mr Reid. Mr Williams said that improvements had been made "notably in locomotives," but he knew of absolutely no improvement in the last thirty-six years, except increasing the boiler pressure of locomotives and making them very much heavier. He had been greatly surprised to learn that derailments took place at crossings. Like Mr Reid he had found that when the engine had passed safely over the point rails it afterwards passed the crossing without giving any more trouble. On the railways that he had been connected with there were no wooden buffers, and that might account for the absence of derailments. The treadle device for preventing accidents appeared to be a very ingenious one, and also, apparently, a very necessary one, where wooden buffers were used. The only trouble he had experienced with crossings due to the gap was the damage done to the nose of the crossing by the constant hammering of the tread of the wheel. To overcome this, when making crossings, a distance piece was fitted between the rails, and arranged so that the flange of the wheel could run on it supporting

the wheel while passing the gap. This support also tended to guide the flange, the bed of the block being grooved. Although simple and effective, this might not, however, prevent derailments where wooden buffers were used. Regarding weighted levers, he had been very much astonished to learn that any trouble had been experienced with them. They had been in extensive use in India for many years, and he had never found them to give the slightest trouble, provided the points were kept clean and in thorough working order. The type must have been somewhat different to that referred to by Mr Williams, for it was possible for the lever to recoil without moving the tongue rail. This class of lever was found to be extremely useful in shunting operations, allowing an engine to go from one line to another without manning the points. For instance, a driver could run his engine through a set of points, and go back on the same line or on to an adjoining line. There was no undue wear owing to the use of weights. The spring used in connection with a lever appeared to him to be one that would act more kindly in action than a weight. He should like to ask Mr Williams if any provision had been made to guard against the breaking of a spring when vehicles were passing over the points. In other matters, Mr Reid's experience and his own seemed to be exactly similar.

Mr F. J. ROWAN (Member of Council) said it might be interesting if Mr Williams would make a comparison between the device that he had introduced and one that was introduced some years ago on the Wemyss Bay line. The latter was an invention of Mr J. S. Williams, an American, by which the main line was really never broken at all, and the diamond crossings were done away with. This was for a single line, but the system had been installed on several double lines on the Continent. He believed it had been very highly spoken of by the inspecting officer of the Board of Trade.

Mr WILLIAMS thanked those who had spoken for their criticisms, and in reply to Mr Reid, said that a 2 feet 8 inches gap corresponded to a 1 in 7 crossing. A 1 in 8 crossing was considered

Mr Williams.
safe by the Board of Trade, but his paper had dealt with flatter crossings than that. and a crossing of 1 in 15 was a very different thing from 1 in 7 or 1 in 8. It had also been said that of the 2 feet 8 inches, only half was unguided. When the elbow was passed the remaining 1 foot 4 inches was unguided. Really the whole distance was practically unguided except for the small distance in the centre. Complications were of two kinds, those which when they worked were of benefit and when they did not work were of no harm, and those that were all right when they worked but were dangerous when they did not work, and he claimed that the protectors belonged to the first order of complication. Regarding accidents, on one of their main lines in Glasgow there were certain crossings which were never used, simply because if carriages were put over them they ran off. Before these crossings had been fitted with protectors nothing was ever put through them, but since the date of equipment the crossings were used regularly without trouble. Diamond crossings were frequently found on goods' lines, but derailments on these lines might foul the main line and this was very common. He could hardly agree with Mr Reid that when the switch points were passed all was safe. Some years ago there was an accident at Eglinton Street, where the engine actually took the one side of the diamond points and the tender the other. In that case, of course, the couplings split, and there was a derailment. Throwing over the weight of weighted levers with a shunting pole was probably a very simple way of doing it, but it also looked to him a very poor method, for due to its momentum in falling, the weight would be sure to rebound up and down several times with a consequent opening and closing of the switch blades, and if a vehicle approached the facing-ways, the flanges might get into the opening and split the points. With regard to Mr Rowan's point, that was a through line form of crossing, somewhat on the style of what he termed the New South Wales system of frogs. These gave a continuous running through the crossing. He had had no practical experience of them, but he had been told that they were not considered strong enough

to make their maintenance cheap enough to be put into regular practice.

The CHAIRMAN (Mr E. Hall-Brown, Vice-President) thought Mr Williams had put his subject in a very interesting manner, making everything very clear to one who was not acquainted with railway work. There was one thing which interested him very much, and that was the application of springs as shown in Fig. 11, which was practically the same as that described by Mr Govan in connection with his chain-speed gear. It seemed to be rather curious and interesting that practically the same application should be used for two such dissimilar purposes and dealt with in two papers read during the same evening. He thought Mr Williams deserved and should receive a hearty vote of thanks for his paper.

The vote of thanks was carried by acclamation.

MOTOR CARS.

By Mr Alexander Govan (Member).

(see plates xx, xxi, xxii, and xxiii.)

Read 26th April, 1904.

The Motor Car has had a very chequered career, and, but for popular prejudice, there is no doubt that the great bulk of the road traction would have been conducted by motor wagons to-day. Cugnot, about the year 1770, constructed a gun carriage propelled by steam, and between the years 1832 and 1840 very promising vehicles were made by Trevthick, Gurney, and Walter Hancock. Later, other constructors came into the field, and it appears that many of the difficulties which they had to contend with were being overcome when vested interest combined with ignorance prevailed and stopped progress. The passing of what is known as the "Red Flag Act" put the development of road traction back half-a-century in this country, and gave our friends on the Continent an opportunity which they have taken advantage of to the full.

Benz, of Manheim, was one of the first to put a commercial vehicle on the road, driven by an engine working on the Otto-cycle principle. The engine was horizontal, and was placed in the rear of the car, belted to a countershaft running across the centre, the countershaft being fitted with differential gear, and having chain sprockets on either end. Power was thus transmitted by chains to the road wheels. In this vehicle will be perceived the germ of the modern motor car. For earlier vehicles see Figs. 1 and 2.

To-day there are upwards of a hundred thousand workmen employed in France, directly and indirectly, on the production of motor cars, and during 1903 there were imported into this country

motor cars to the value of £1,800,000. These facts should be sufficient to create great interest in this industry, and to overcome the prejudiced opposition which has been shown in the past.

I have no desire to make this a historical paper, but rather to deal with the various parts of the motor car from the time that it really commenced to show signs of being adopted for every day use, and the deductions and theories advanced are rather those of the mechanical engineer than of the scientific expert.

To make discussion easier, it might be better to deal with each item in connection with the car separately, beginning with fuel:—

PETROL.

This is one of the light hydro-carbons, distilled from crude petroleum. The two essential points of good spirit are correct specific gravity and purity. The specific gravity should not be less than ·68 or over ·70. At this density the spirit not only vaporises freely, but it mixes readier with the air than would a spirit of heavier specific gravity. The manufacture of petrol may be explained in a few words:—

A large fire is kindled under a vat which contains thousands of gallons of petroleum. The first vapour that passes off is the petrol vapour. This is conducted through a worm surrounded by cold running water, where it is condensed and afterwards run into the washing tank. The washing process is to remove impurities. Air is forced through a pipe at the bottom of the tank, and sulphuric acid is forced into the petrol at the top. This is allowed to go on until the petrol and sulphuric acid are thoroughly mixed, when the process is stopped. The sulphuric acid then falls to the bottom, taking with it the impurities. Any remaining sulphuric acid is removed by an alkaline mixture, which, in its turn, is allowed to precipitate, when the petrol is considered ready for the market.

Should the process of distillation be hurried, or the temperature raised too high, the spirit will contain a proportion of the heavier hydro-carbons, and if not thoroughly washed it leaves a deposit of pitchy matter on the valves and sparking plugs, which may be the

cause of much trouble to motorists. Temperature effects the specific gravity of petrol in the inverse ratio of two to one; that is to say, if the temperature is raised two degrees, the specific gravity is lowered ·1. It will be seen that during the winter months the specific gravity of the petrol may be from 1·0 to 1·5 greater than during the warmest part of the year.

CARBURETTER.

The carburetter mostly in use is the Daimler type, Fig. 3. This consists of two essential parts, namely, the float feed and the mixing chamber. The petrol is either forced by air pressure into the float chamber, or the petrol tank is placed higher than the carburetter so as to ensure gravity feed. A constant height of petrol is maintained in the float chamber by means of a needle valve which passes through a tube in the float. The needle valve is operated by a small link motion, so that as the float rises the needle sinks, and so closes the opening to the petrol tank. The valve is set to keep the height of the petrol about $\frac{1}{4}$ of an inch from the nose of the jet in the mixing chamber. The air opening to the mixing chamber is below the jet, so that the inrushing air carries with it the petrol spray from the jet on its way to the engine. This is one of the simplest forms of carburetters. Many devices have been introduced to insure the pulverization of the petrol by impinging it against serrated cones and perforated diaphragms, but they do not appear to give any better result than the system just described, Fig. 4. To overcome the difficulty arising from a variable atmosphere, it is usual to fit an air-regulating lever. This also is useful when a variation in the quality of petrol takes place, and, as a rule, the motor will start better on a rich mixture, this being obtained by partly closing the air intake.

It has been found that the air opening should vary as the speed varies, and although many attempts have been made in the past to insure a variable air opening controlled by the speed of the engine, the point does not appear to have had the attention it deserved until the introduction of the "Krebes" carburetter. In

this device a constant air opening is fixed sufficient to run the engine at about 200 revolutions per minute, and as the speed is accelerated the area of the opening is increased by means of a piston valve controlled by a spring of suitable tension. As the speed increases, and more air is required by the engine, the piston valve is pulled further and further through its cylinder, opening suitable air ports on the cylinder walls; thus the area of the air supply is governed by the piston speed of the motor. This device permits the engine to be run quietly at a very slow speed, and insures the maximum power being given off at any speed between the maximum and minimum, owing to the fact that approximately the correct mixture of air and petrol is maintained. It will be observed that the success of the device depends to a large extent on the tension of the air-inlet valve-spring, Fig. 5.

Other devices are constructed on the theory that correct mixture at all speeds can only be obtained by introducing an attachment which will vary the petrol supply as well as the air supply. This is done in one way by fitting a needle valve into the petrol jet, the air inlet being through annular ports surrounding the jet. These ports are covered by a flat-faced valve of suitable shape to allow the mixture to pass through it. The top end of the needle valve is fixed to the air-inlet valve, and operates with it, Fig. 6. When the suction stroke takes place the air valve is forced from its seat; at the same time the needle valve in the jet is lifted. When the piston reaches the end of the suction stroke, the air-inlet valve immediately returns to its seat, bringing with it the needle valve, and closing the petrol jet. This system has something to recommend it, for when running at a slow speed with reduced air-inlet area, there is a tendency for too much petrol to be drawn from the jet, and this results in a deposit being left on the sparking plugs and valves, showing a waste of petrol when the area of the air inlet only is made variable.

Some carburetters are in use (chiefly in America) without a float feed. Such a carburetter consists merely of a casting containing a mushroom valve held on its seat by a spring of suitable

tension. The inrushing air forces the valve open from the valve-seat. A small hole is drilled through the valve-seat into a boss, which is piped up to the petrol tank. This boss contains a small screw valve for the purpose of regulating the supply of petrol. This is perhaps the very simplest form of carburetter in use, and certainly for launches it would appear to have advantages over any other. The petrol cannot overflow the jet, as it may do in the float-feed type should there be a sea running, Fig. 7.

All carburetters should have a heating jacket round the mixing chamber, as the intense cold caused by evaporation freezes the moisture in the air, and so chokes up the working parts of the device as well as the air opening. As a rule, heated air obtained from the vicinity of the exhaust pipe is taken into the intake pipe, and this is a very good practice. On some carburetters the mouth of the intake pipe is belled out, and covered with a fine wire gauze for the purpose of straining the moisture from the air before entering the carburetter.

IGNITION.

The system fitted on the large majority of cars is known as the high-tension system. Many types of storage cells are in use. Generally two cells are adopted, giving 4 volts and from 10 to 50 ampere hours. To obtain the spark at the firing plug, the current is conducted through a make and break device fitted on the half-time shaft of the motor. This device consists of a ring of wood fibre into which metal strips are fitted, having terminals to which storage cells are wired. The current is then conducted through the induction coil fitted with trembler blades, and from it to the sparking plug, the circuit being completed through the engine. This system requires little attention beyond being kept clean. The platinum points on the trembler blades require filling from time to time. The metal plates in the make and break burn just at the point of breaking contact. This can easily be remedied by skimming up in the lathe. The cells can be recharged through a 16 C.P. lamp. The platinum tips of the sparking plugs also require cleaning occasionally.

Magneto ignition is often fitted, but in the majority of the designs the moving mechanical parts are very small. This is a source of trouble, and no doubt is the reason why the system has not been more generally adopted. A shield, having slots cut in it, is mounted between the magnet and the armature, and is made to oscillate by means of a small crank or eccentric on the engine shaft. The shield interrupts the magnetic lines from the magnet, and as it oscillates the current is alternately made and broken, the current being conducted to a make and break device in the cylinder head, Figs. 8 and 9.

THE ENGINE.

Credit is due to the late Herr G. Daimler for the design of the type of engine, which, in modified form, is fitted to the large majority of modern motor cars. It belongs to the Otto-cycle type. As placed on the market it was fitted with lamp ignition. This is now practically discarded by makers, because, in the first place, there was a danger of fire, and no doubt a number of cars were burned through it; and in the second place, the point of firing in the cylinder was fixed. Electric ignition overcame both these difficulties. To govern the engine, fly-weights were used operating hit-and-miss pauls, which, in their turn, operated the exhaust valve. This system got out of order too easily, and was very noisy. Greater reliability and quieter running was obtained by transferring the cutting out of the engine to the induction pipe. This was done by allowing the fly-weights to operate a butterfly valve in the induction pipe. A great many manufacturers are now controlling in this way. The difficulty of running the engine slowly when the car is stationary, and the hunting of the governor, are the chief objections to this system. Engine control is now transferred to the carburetter, as has already been described. The difficulty of preventing the engine from racing when the load is suddenly taken off, is managed by fitting an attachment between the clutch foot pedal and the control lever on the carburetter, so that, as the clutch pedal is depressed, the gas supply of the engine is cut down. To overcome this difficulty, governors are

also fitted operating piston valves in the induction pipe, or sometimes a variable lift is given to the inlet valves, which may also be controlled by a governor.

The weight of the engine per horse power is perhaps the most important factor in motor car design. In some quarters high speed has been condemned, but if the engine has not been complicated with two cycle devices, then acceleration of speed would appear to be the only road open to increased efficiency per pound weight. Already the lift and the area of the valves, also the best position for them in the cylinder head, has had the most careful attention of designers.

To build high speed engines satisfactorily is merely a question of design, material, and workmanship. At first protests were loud and long against running at 1000 revolutions per minute by those who ran their engine at 750 revolutions. Now the latter speed has been accelerated to 1000, and the 1000 to 1500, so that what is condemned to-day by some to be a high speed, is accepted to-morrow by others. Progress must not be trammelled by mere opinions. High-speed engines have been running for years without any signs of undue wear. They have been built by people who know their business, and whose practice is based on experience.

A comparison of surface speed of the modern locomotive with a petrol engine running at 1500 revolutions per minute will be interesting. A locomotive running at 60 miles per hour, having a 26-inches stroke and a driving wheel 6 feet in diameter, has a piston speed

$$= \frac{60 \times 5280 \times 4\frac{1}{3}}{60 \times 18{\cdot}85} = 1213{\cdot}3 \text{ feet per minute.}$$

A petrol engine running at 1500 revolutions per minute, having a stroke of 120 m/m, has a piston speed

$$= \frac{4{\cdot}724 \times 2 \times 1500}{12} = 1180 \text{ feet per minute,}$$

It is thus seen that the piston speed of the high-speed petrol engine is actually 33·3 feet per minute slower than that of the modern locomotive.

In comparing the surface speed of the crank shaft bearings, it is found that when the locomotive engine is running at 280 revolutions per minute, and the crank shaft is $6\frac{1}{2}$ inches in diameter, that the surface speed is

$$= \frac{20{\cdot}42 \times 280}{12} = 476{\cdot}46 \text{ feet per minute.}$$

The petrol engine having a $1\frac{1}{8}$ inch nickel-steel crank running at 1500 revolutions per minute, has a bearing surface speed

$$= \frac{3{\cdot}53 \times 1500}{12} = 441{\cdot}25 \text{ feet per minute.}$$

So that surface speed of the crank shaft bearings in high speed petrol engines is 35·21 feet per minute slower than is found in modern locomotive practice.

Objections are raised to the high speed engine on the ground of excessive vibration. When the car is standing, and the engine is not well governed, then vibration is excessive. But the latest controlling devices, when the engine is running on light loads, practically overcomes this objection. When the car is in motion with the highest gear, the vibration from the engine transmitted through the frame is practically *nil*, the speed of the car acting as a fly-wheel; but in hill-climbing, with the low gear, this action is decreased and vibration is felt. The best remedy for this would appear to be the multiplication of cylinders. Already some makers have placed six cylinder cars on the market to meet the demand of those who wish to drive under ideal circumstances, and who can afford to pay for the luxury. Practice has proved that good results are obtained when the stroke is one-fourth greater than the bore. A slightly greater proportionate length of stroke may be used with advantage, the speed of the engine being maintained by opening the exhaust valves early. There is no exact data yet to show if any gain results in making the stroke much longer than the proportion indicated. No doubt this proportion shows greater efficiency than when the bore and stroke are equal. As a general rule, it way be taken that the longer the stroke in proportion

to the bore, the earlier the exhaust-valves must be opened, but, as the stroke is increased within limits, greater advantage can be taken of expansion.

If it is desired to run the engine up to 1500 revolutions per minute, the exhaust-valve should be set to open early. An ignition which can be advanced and retarded should be fitted, so as to enable the engine to be started, which can only be done with safety when the ignition is retarded. After the engine is started the ignition can be gradually advanced, and when 1500 revolutions per minute is reached, it will be found that the contact in the commutator is being made really before the piston arrives at the top of the stroke. These points are shown on Fig. 10.

A two-cylinder engine, having a bore of 90 m/m and a stroke of 120 m/m will give 11 B.H.P. at 1500 revolutions per minute. Taking the efficiency of the engine to be 80 per cent., its I.H.P. is 13·75, which gives a mean pressure of 62 pounds per square inch. The compression before ignition is 60 pounds per square inch, which runs up to 150 pounds per square inch at the point of firing. The weight of the engine is 194 pounds, or 17·7 pounds per horse power.

It is well here to note that the motor is seldom accelerated to the maximum speed under ordinary running conditions, and that the speed continually varies according to the nature of the roads and traffic. Figs. 11 and 12 show a 3-cylinder petrol motor of the standard type.

LUBRICATION.

Excellent results have been obtained from the splash system, fed from a sight-feed lubricator fixed on the dashboard, which can be set to give any number of drops per minute. Pipes are led to the main bearings, and also to the bottom of the cylinder, so as to drop on to the connecting-rod ends. Oil of sufficiently high vaporosity and flash point can now easily be obtained. An inspection door is usually fitted to the side of the crank chamber, and the oil should be fed by the lubricator so as to compensate

for that used, keeping oil high enough in the crank-chamber to touch the connecting-rod ends. Catch pockets are fitted on all bearings to ensure lubrication by the splash.

COOLING ARRANGEMENTS.

At first water tanks were fitted holding from 10 to 20 gallons, and the water was circulated through the cylinder jacket by means of a pump, but satisfactory results were not obtained until a radiator was fitted. This consists of a coil of copper pipe, having radiating gills soldered to it about every $\frac{1}{4}$ of an inch, and, as a rule, from 4 to 6 feet of this pipe is used per horse power.

The type of radiator known as the honeycomb has now become popular. This consists of a properly designed tank which forms the front of the motor bonnet, into which is soldered a nest of square tubes, held apart at either end by a square wire about $\frac{1}{16}$ of an inch thick. The water runs through the spaces between the tubes, and the cooling is assisted by a fan driven off the engine shaft immediately behind the radiator. This creates an air current through the square tubes. On the whole, the system can be said to be very satisfactory, although at first the tubes leaked very badly, but their manufacture has been improved. The space round the outside of the nest of tubes forms the water tank, so that a tank under the car is dispensed with. Of course, objections can be taken to the fan on the ground of increasing the working parts. A pump is also used in this system to circulate water, Fig 13.

The Thermo-syphon system, although it has proved its efficiency over and over again, has met with a deal of opposition. It is alleged that when fitted the engine will overheat, and that the water will boil away in a short journey; and further, that the engine will not develop so much power.

As the adoption of this system simplifies the motor car, it is worthy of full consideration. To ensure circulation the water tank is placed above the cylinders. A water pipe or tank surrounds the engine top and bottom, which also forms part of the engine bonnet. The two pipes or tanks are joined by vertical cooling pipes about

10 inches in length, and on a 10 H.P. engine there may be 48 pipes, the bottom horizontal tank or pipes being connected to the bottom of the engine water-jacket. This forms a complete circuit for the water, which, as it becomes heated rises into the top tank and falls through the vertical cooling tubes entering the engine-jacket again at the bottom.

In the "Argyll" system, when the car is being hard driven, the temperature in the top tank rises to about 130 degrees F., the bottom tank will then register about 100 degrees F. Fifty-two pounds of water is carried in the system, and at this variation of temperature the water rises at the rate of 3·71 lbs. per minute, therefore the whole of the water will be circulated in 14·18 minutes. There is 40 feet of $\frac{5}{8}$ of an inch pipe or 4 feet per horse-power. The cooling surface is 6·49 square feet.

The system depends on slow circulation through the vertical pipes for efficiency. The quantity of water which rises into the top tank due to the heat of the cylinder is practically constant, and if this is allowed to fall through double the number of vertical tubes of equal length, the water will pass through at half the speed allowing double the time to cool, Fig. 14.

Public trials have demonstrated its efficiency beyond all doubt. In the month of May last year, a car fitted with one of these bonnets was driven in the Automobile Club's trial from Glasgow to London, only making one stop at Leeds, without adding a drop of water. Also in the Thousand Miles Reliability Trials, organised by the Automobile Club and held round London, a car was driven the total distance without adding water. This is probably the longest distance ever yet accomplished by a motor car without replenishing the water tank. Also it is to be noted that a French car fitted with this system did the fastest time from Paris to Vienna in the great race held in 1902. This answers in full the arguments used against the system.

FRICTION CLUTCH.

The weight of the engine per horse-power and the speed at which the horse-power is obtained practically determine the

dimensions and weight of the whole of the remaining parts of the car. Through a well-designed friction clutch of 11 inches diameter 12 H.P. at 1,500 revolutions per minute can safely be transmitted. The angle of the conical face of the clutch should be 12 degrees, and the spring should exert a pressure of about 115 pounds. Clutches having this relation of diameter to power are found to give very satisfactory results, and require little or no attention. The rim of the fly-wheel is coned out to the required angle. The male portion of the clutch faced with leather is held up to its work by means of an open spring. An attachment to the foot pedal overcomes the spring, and withdraws the clutch when the foot pedal is depressed. The chief objections to this clutch are the continual end thrust when the car is in motion which must absorb power, and the difficulty of obtaining a flexible joint between the clutch and the gear box. These are overcome when the clutch is made self-contained, by boring the rim of the fly-wheel out parallel and inserting a ring containing the leather-faced clutch coned in the opposite direction. The ring is fixed in the rim of the fly-wheel and the leather-faced male portion of the clutch is mounted on the engine shaft. The open spiral spring is inside the fly-wheel forcing the male portion outwards into the taper ring, so that the spring is exerted between the boss of the fly-wheel and the male portion of the clutch. Therefore no end thrust is transmitted to any bearing when the car is in motion. When the foot pedal is depressed the male portion of the clutch is forced into the fly-wheel against the spring, when, of course, end thrust takes place without loss of driving power. A ball bearing is provided, in which the end of the spring is fixed and revolves with the fly-wheel, when the motion of the male portion of the clutch ceases. The engine shaft extends only to form the bearing for the clutch, and the power is transmitted to the gear box by means of a universal sliding-joint. This form of clutch gives excellent results when the diameter is kept large enough, so that only a comparatively light spring may be used, thus avoiding the danger of burning the clutch leather, Fig. 15.

GEAR BOX.

The system most commonly in use is known as the "Panhard" type. It consists of a train of toothed wheels driven from the engine through the friction clutch. Over this a square shaft is mounted carrying another train of toothed wheels. These wheels bear suitable ratios to one another, and are so placed that only one pair can be in gear at a time. The row of wheels on the square shaft are all mounted on a sleeve, which can be moved along the square shaft, and is operated through mechanism by the change speed lever placed convenient to the driver. The reverse is obtained by means of an intermediate wheel driven from one of the fixed wheels. One of the wheels in the sliding sleeve is made of suitable size to gear with the intermediate when the reverse is required. The whole is contained in an aluminium box and runs in grease.

This system requires a very large gear box; the shafts are usually so long that they spring under the load, especially when starting, and so cause the teeth to chatter. Often a ratio in the wheels of 4 to 1 is required, so that to keep down the overall size of the box sometimes the driving wheel is made too small, Figs. 16 and 17. To overcome the difficulty of long shafts some makers have adopted two sliding sleeves carrying gear wheels. In this way it is possible to arrange the wheels closer together, although a more complicated mechanism is required to operate them. It is sometimes done with a cam movement.

Serious objection has been taken by many to the wheels sliding into gear across the face of the teeth. It may not be considered mechanical, but it enables a very simple change-gear mechanism to be built, and when it is carefully handled much less damage is done to the teeth of the wheels than one would suppose.

A change gear is made with all the wheels running in gear. A deep slot is cut in the shaft on which the train of wheels run idle, and into this a disappearing feather is fitted; the feather being forced up into the keyway, cut into the wheels to receive it, by means of a spring. A washer is placed between each wheel to

prevent the possibility of the feather engaging two wheels at the same time. The chief objection to this gear appears to be the load thrown on the moveable feather.

Change gears operated by friction clutches are also adopted by some makers, but they have always been made too small in diameter, and if made large enough the gears would be much too bulky. To get the clutches to work sweetly and to take the grip they really ought to be as big as the main clutch in the car. Other makers are using square-jaw clutches. This overcomes the objection of sliding the wheels across the face of the teeth, and as the gear fitted to the "Argyll" car is of this type, I am best acquainted with it, and it might not be out of place to describe it here.

This gear is designed to secure lightness, short shafts, and to keep the wheels always in gear on the two speeds which are continually being used. The slow speed which is only used for extraordinary hills is made to slide across the face of the teeth as in the "Panhard" type. The size of the wheels are kept down by mounting the slow speed on the countershaft, which runs at half the speed of the engine, so that gear wheels of a ratio of 2 to 1 are only used, the fast speed being driven direct without reduction. The countershaft runs at half-speed and drives the medium-speed pinion, on which is cut the medium-speed clutch. To avoid smashing the clutches when changing the gears a spring lever is fitted which shoots the clutch in at the proper time. Before changing gears the main friction clutch is withdrawn to take off the driving strain. (This practice is followed in all systems.) In this gear the countershaft is mounted alongside the main shaft, enabling the lid to be easily detached and the gear wheels taken out without crawling underneath the car. This arrangement also allows the change-speed lever to be moved in a T-slot, so that the lever goes to a full stop when engaging either of the three speeds. This is an advantage when driving in the dark, Figs. 18 and 19.

All gears now fitted to cars are contained in an aluminium box

and run in grease, the bearings being provided with oil-conducting grooves. Oil replenishment is either done through a lid on the top of the gear box or from a reservoir on the dash board fitted with a pump for forcing the thick oil into the box. Great trouble was at first experienced in getting the gear wheels to stand, but steel makers have overcome this difficulty by finding a mixture suitable for the work. The shafts in the gear box are often made from nickel steel.

There are now two systems for transmitting the power to the driving wheels striving for supremacy. They are known as the chain drive and live-axle drive. No actual tests have been made to prove which is the more efficient, there being many difficulties in the way of arriving at even an approximate result. In the chain drive the power from the gear box is transmitted through a pair of bevel wheels to a countershaft hung across the car. The countershaft is fitted with a differential gear, and on either end is mounted the chain sprockets. Chains transmit the power to the chain wheels, which are bolted to the driving wheels of the car, Fig. 20. In the live-axle drive power is transmitted by means of a universally jointed propeller shaft to the driving bevel pinion mounted in the case which surrounds the live axle. In fact, the live axle is merely an enlarged countershaft made to serve as the rear axle, the driving wheels being mounted on either end, Figs. 21 and 22. It is claimed for the chain drive that being direct it is more efficient, that it is a flexible drive, and that it can be made stronger than the live axle.

Regarding efficiency; in comparing two cars of equal power the bevel gears which drive the countershaft on the chain-driven system transmit an equal power, and therefore the same frictional loss will take place, and whatever power is absorbed by the chains will be in excess of the power lost in the live-axle drive.

With respect to strength it has to be admitted that a greater proportion of the failures up till recently occurred in the live axle. Makers have now strengthened the weak parts, and in many cases adopted nickel steel, with the result that they are now as

reliable as solid axles. The claim that the chain is a more flexible drive appears to be fallacious, as it is known that chains stretch. They are not elastic, however, and stretch permanently. It must be noted that the live axle being hung on long carriage springs much of the shock from sudden starting is absorbed, and when a well-designed friction-clutch is fitted there need be no shocks whatever thrown on the driving gear when starting. Some makers, to overcome this objection, have fitted a spring drive to the propeller shaft, but this is an unnecessary complication.

Chains are never covered in as they sometimes break. If a covered chain broke, in all likelihood it would get caught and tear the cover right off the car. A car ran in the Thousand Miles Reliability Trials, held last year, fitted with chain guards. They appear to act very well, but it is not likely that a chain has ever broken inside one of them yet. When not covered the chains get into a filthy state, and the grit from the road soon grinds both the teeth of the sprockets and the chains themselves. Tight places and slack places are sure to result, causing a great deal of the noise which is made by the modern chain-driven car. Live axles are now made of ample strength. Some are run on ball bearings while others run on roller bearings. The end thrust from the bevel drive is always reduced to a minimum by fitting an end-thrust ball bearing. The teeth of the bevel driving wheels are planed from steel stampings, which are afterwards hardened. All the bearings are of hardened steel, and the whole axle is encased so that not a particle of dust can get in. The case is filled with thin grease, and the teeth being cut in a perfect manner run noiselessly.

Three years ago it was said by many that live axles were only suitable for very light cars to carry two people. To-day they are being fitted to the largest pleasure cars built, and continue to gain in popularity, Fig. 23.

FRAMES.

The heavier car frames were at first made of channel iron. This gave place to the wood frame, with inside filch plates fixed to

the side of the wood runners to stiffen them. A number of makers used tubular frames, the tubes being led into malleable cast iron joints and brazed together in the same manner as a bicycle frame.

The wood frame with steel filch plates makes a very satisfactory job, and it has the advantage of being cheap to make, but makers are gradually adopting hydraulic pressed-steel frames of [section. The web is deep in the centre, and tapers off in a curve to either end, where brackets are bolted to receive the spring ends. Fig. 24. Another frame is made in inverted U section. The two webs in this frame are also left deep in the centre, and the sheet steel is cut of suitable shape, so that when it is bent over, pockets to receive the springs are formed on the ends. This frame overcomes the need for end brackets, and will stand a greater dead load than the channel section, Fig. 25.

Both the wood and tubular frames are apt to sag in the centre. The pressed frame keeps straight, and it is also light. Objections have been raised to it on the ground that if the car to which it is fitted met with an accident, in all probability the frame would become useless. Sometime ago I met with a bad accident on a car fitted with a steel frame. The car, through a side slip, ran into a wall. The front extension which carries the front spring was bent right in, the front axle being practically torn from the car. Afterwards the frame was heated, and pulled out to the proper shape in three-quarters of an hour. I am of opinion that had this been a wood frame, the wood would have been splintered and one of the runners at any rate rendered useless. The pleasure car is now built with a long wheel base which allows long springs to be fitted, so that a rough road may be covered at a high speed with a degree of comfort which was impossible in the days of short wheel bases and short springs. The springs should also be flexible. The French manufacturers make a lighter and more flexible spring to carry the same load, and this spring appears to keep shape better than those of British make.

AXLES.

The axles for the majority of cars built in this country are still

made in France and Belgium. Special plant has been laid down to meet the enormous demand for forged axles. Where the live-axle drive is adopted, however, they are made in the home factory; the axle proper being made from nickel steel bars and the casings from weldless steel tubes, the whole being a machine shop job. Sufficient attention has not been given to the possibilities of the tubular front axle. This is easy and cheap to make, and certainly gives as good results as the solid forged axles; it has also the advantage of being lighter, Fig. 26.

WHEELS.

These are now exclusively of the artillery pattern. Wire wheels have been fitted to many cars, but the lateral strain thrown on them when turning corners at high speed has caused them to collapse, and only very few makers are now fitting them. No doubt they can be made to stand by keeping the hub flanges far enough apart, and using a thick gauge of wire, but the one great objection to them is the difficulty of keeping them clean.

TYRES.

There can be no doubt that pneumatic tyres have made it possible to very considerably reduce the weight of the car, and also have been one of the chief factors in attaining high speed, as they reduce the resistance very materially. The chief objection, of course, to their use is the liability to puncture. Buyers of cars fitted with solid tyres use them because they wish to be absolutely safe from punctures, and they do not wish to travel fast. With pneumatic tyres punctures are of very rare occurrence at any speed up to 18 miles per hour, and a great deal more comfort is found in driving; besides, the car will run more economically, will climb hills better, and the saving to the axles and mechanical parts of the car is very great. Naturally the greatest gain can be obtained from pneumatic tyres when the car is specially designed for them, as the lighter the car is the longer the tyres will last, besides being less liable to puncture.

A great mistake has been made in fitting tyres of too light a section, and to nearly every type of car there is a marked tendency

now to fit heavier tyres. This in a large measure will overcome the objections that have been raised. There can be no doubt, however, that the surface of some roads are very much harder on tyres than others, but the road question appears to be absorbing attention in the proper quarters, and there is every reason to believe that the roads will be put into a better condition in the near future, This is a matter for congratulation, as the road question and motor cars are very closely allied.

CONCLUSION.

Having given a brief description of the various parts of the motor car it may be interesting now to deal with it from a general point of view. Although the most of my remarks apply to all petrol-driven vehicles, still they apply most particularly to the pleasure cars. On many important points no reliable scientific data can be found, and it may be said that the modern motor car is the result of experience and experiment. For example, the amount of vibration and shock that is absorbed by the springs and pneumatic tyres can only be approximately ascertained; further, the road surface continually varies, and it is sometimes necessary to run over very rough roads with depressions in them quite 4 inches deep. To be strong enough to stand this and to be also light enough to carry four or five people at an average speed of 20 miles per hour is a marvel to many engineers. The secret is found in the weight per horse-power. Many pleasure cars are now built which only weigh 1 cwt. per horse-power of the motor. As the power required to climb hills increases in a direct ratio to the weight of the car and the load, an enormous advantage is gained by keeping the car light. Of course the reliability must not be sacrificed, but special materials of the most suitable quality must be used; aluminium wherever possible and steel of different mixtures best suited for the various purposes. The speed at which the engine shaft is running when giving off full power practically determines the weight of the whole car. It is, therefore, of the greatest importance that every encouragement and assistance should be given to the development of the high-speed engine.

The weight of the car per horse-power determines its efficiency as a hill climber, and it also determines the cost of running per mile for tyres. There can be no doubt that where the mechanism is properly looked after the tyre bill is one of the biggest items.

At present improvements appear to lie along the line of acceleration of engine speed and reduction of weight. These two factors demand simplicity. Any of the known systems of two-cycle engines with their complicated valve gear and compression devices, require such heavy plant that there does not appear any hope for them ever being adopted in motor cars. Mere weight does not mean reliability, and it is certainly disastrous to efficiency. A combination of reliability and efficiency can only be found when every part is designed in the simplest possible manner, and the metal distributed to the best possible advantage. A careful selection of the most suitable material for the purpose must be made; and further, the car must be considered as a whole in order to get a proper distribution of strain and vibration. On the top of all this a very high standard of workmanship is absolutely required. Engineers complain that motor cars are too light; it is a very easy matter indeed to make the parts heavy. In doing this, efficiency is destroyed. All the experience of designers has been concentrated in an effort to obtain reliability without sacrificing efficiency.

The gearing of the car is sometimes objected to, but when it is remembered that four times the power is required to take a car up hills met with, it would appear that the gearing is preferable to such an increase in the size of the engine.

The advertised horse-power of cars is at the present time no guide to the purchaser. While makers have arrived at this factor in different ways, still, if only the brake horse-power were given, it would not be a reliable guide, as the efficiency of transmission and the weight of the car would still require to be taken into account. Results in public tests are also to some extent misleading, as excellent cars sometimes perform badly through a minor temporary defect. This fact was clearly demonstrated in the Thousand Miles Reliability Trial recently held, where marks were lost for

every minute occupied in cleaning or making adjustments to the car, with the result that many cars were not seen to the best advantage, especially in the speed and hill-climbing tests.

If a quarter of an hour is given to the car before starting in the morning, there is now very little fear of even a slight stoppage in a day's run. Of course, cars that run through such public tests well deserve all the credit they get.

Through discussions in Institutions such as this, the science of the motor car will be evolved, and one day written. The industry has made very rapid strides. It is difficult to realise that it is only from four to six years ago since the early types of the well-known cars were built in this country. At first the public sneered, and showed no belief whatever in the movement. As cars became better, cries were heard that they should again be abolished, but to-day we hear very little sneering at breakdowns, and have the satisfaction of knowing that the majority of the public recognise the fact that the motor car has come to stay. Credit for this is due, in the first place, to the men who have mastered the mechanical details, and placed the motor car as a useful vehicle practically beyond reproach; and, in the second place, to the organisers in the Automobile Club, who have never wearied in their endeavours to show its possibilities to the public.

The best augury for the future is the fact that all youths display a passionate interest in motor cars. As a nation we are undoubtedly becoming more and more mechanical. Prejudice, so far as automobiles are concerned, does not appear to exist in the rising generation.

I have not referred to the delivery van, because, so far as the petrol vehicle is concerned, no organised attempt has yet been made to prove its efficiency. Trials are to be held this year, and no doubt in a short time a large percentage of the goods passing through our streets will be carried by means of motor delivery vans and wagons. For loads above two tons, doubtless steam will be largely used, but not for the pleasure vehicle. Direct application of fuel in the petrol car as now designed, where silent

and steady running can be obtained, appears to be so simple and easy to manage that the steam car as at present constructed cannot compare favourably with it.

Glasgow is well equipped with all the necessary requirements to take advantage of the possibilities of this new industry. In Glasgow, perhaps better than any other centre in the world, engineering practice is understood, and for these reasons I have confidence and great pleasure in recommending to you a serious study of the motor car.

Discussion.

Mr T. Blackwood Murray, B.Sc. (Member), thought the title of Mr Govan's paper was a little misleading. It might more properly have been designated a paper on "Internal Combustion Petro Motor Cars," as it did not touch upon steam or electrically propelled cars, in both of which fields a great deal of splendid work had been done in the past few years. Already the subject was so large, and so many types of cars were on the market that the consideration of any one of the organs of a motor car would provide ample material for a most interesting paper. Probably no other piece of mechanism had proved more attractive to modern engineers or had received more attention from designers in the last few years. The subject was obviously a most interesting one. On page 244 of the paper, it was stated that the wire gauze over the inlet pipe strained the moisture from the air before entering the carburetter, but he scarcely thought it could have any appreciable drying effect on the air, as the velocity of the entering air was considerable, and any moisture caught upon the gauze during one stroke would be carried into the engine by the succeeding suction stroke. The gauze screens, however, prevented road-grit and the larger particles of dust being carried into the engine. Respecting the question of ignition, he thought it would have been well if Mr Govan had pointed out that the accumulators could only be charged off a continuous current circuit through a lamp as a resistance; further, the size of the

Mr T. Blackwood Murray.

lamp should be chosen with due regard to the voltage, for a 16 C.P. lamp on a 100 volt circuit took 2½ times the current required by one on a 250 volt circuit, which meant that the charging of the cells would take 2½ times as long with the latter pressure. With high-tension ignition, as usually employed and as described by Mr Govan, it was necessary to have an advancing and retarding arrangement. The chief necessity for this arose from the fact that, in this system of ignition there was a considerable lag or lapse of time between the making of the contact by the commutator in the primary circuit and the passing of the spark in the secondary circuit which ignited the charge. This lag was due to the time taken, after the primary circuit was completed, to magnetise the coil and to attract the trembler and break the primary circuit, whereupon the spark occurred in the secondary circuit. It was to compensate for this lag that it was necessary to advance the spark, or, as it should rather be expressed, to complete the primary circuit earlier. Where ignition was obtained by a make and break inside the cylinder, as in magneto ignition, this time lag might be almost entirely eliminated and it was then found that a very small advance was necessary to get the maximum results. Owing also to the fact that it was necessary to have a certain angular velocity on the engine to generate the current for ignition from the magneto, it was quite permissible that the spark should take place, even at starting, slightly before the dead centre. As the momentum of the fly-wheel was ample to ensure that the crank would be within the dead arc by the time ignition had taken place there was therefore no possibility of a back kick. It was most important that the ignition should take place at a proper period of the cycle, and this point could best be determined in the test-shop, where the B.H.P. of the engine could be accurately measured and indicator diagrams taken at the same time. When this point had been determined for the various speeds of the engine, it was certainly desirable that maximum efficiency should be secured by arranging for the ignition to be automatically advanced and

retarded by a governor fitted to the engine itself, and this was now being done by some leading makers. The advantages of magneto ignition over the high tension system were very great. The former did away at once with the necessity for batteries or accumulators, and instead of a multiplicity of high and low tension circuits, only a single insulated conductor, leading from the magneto to the sparking plugs, was required. It was easily understood, as there were no electrical complications to puzzle the layman, and if properly designed the moving parts need give no trouble. In the type Mr Govan had described, a reciprocating form of magneto was shown, and it was obviously a mistake to introduce more reciprocating parts into a high-speed engine than were absolutely necessary when the same results could be equally well obtained by a rotating mechanism, and, as might be expected, rotary magnetos were rapidly replacing those of the reciprocating type. Indeed, had they been used all along, and proper attention given to the design of the make and break gear, high tension ignition would never have secured anything like the hold it had. In designing a rotary magneto, it was of course desirable to have a fixed armature, so that no brushes, commutators, or slip rings were required. In the hope that it might interest the members he had shown in the accompanying three illustrations, Figs. 27, 28, and 29, a magneto of this type. It was a simple alternating current generator having a fixed armature and rotary magnetic field. The armature core A A consisted of a soft iron laminated ring having a wide gap at the lower side, and a reduced portion at the top side to accommodate the winding F, which consisted of a coil of fine insulated copper wire, the one end of this coil being earthed, and the other connected to the live terminal in the engine cylinders. The field magnet system was keyed to an extension of the crank shaft D D, and consisted of a phosphor bronze spider H H, carrying upon it two mild steel pole pieces G G, which were magnetised by a couple of bar permanent magnets J J. As the field magnets rotated it was evident that the magnetic flux would be first in the one direction and then

Fig. 27.

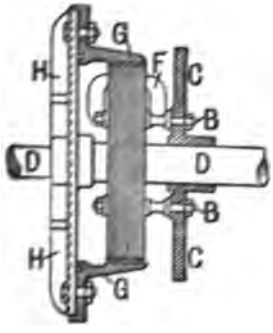

Fig. 28.

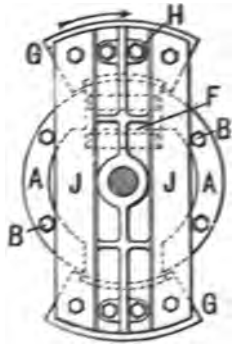

Fig. 29.

in the other through the armature coil, thus generating in it an alternating current. A make and break was inserted in the combustion space controlled by a simple trip cam, and the apparatus was so arranged that the break took place when the current flowing through it was a maximum, and the resulting spark ignited the charge. The magneto shown was one of the improvements patented by the Albion Motor Car Co., Limited. Mr Govan mentioned the difficulty of governors hunting when the engine ran slowly, but this was purely owing to the fact

that the governors fitted on most engines were quite unsuited for low speeds, and were only designed to control the engine at, or about, its maximum speed. This difficulty could be entirely got over by a properly designed governor, and the engine run smoothly and steadily with the governor at about 200 revolutions per minute. Fig. 30 illustrated a new type of centrifugal

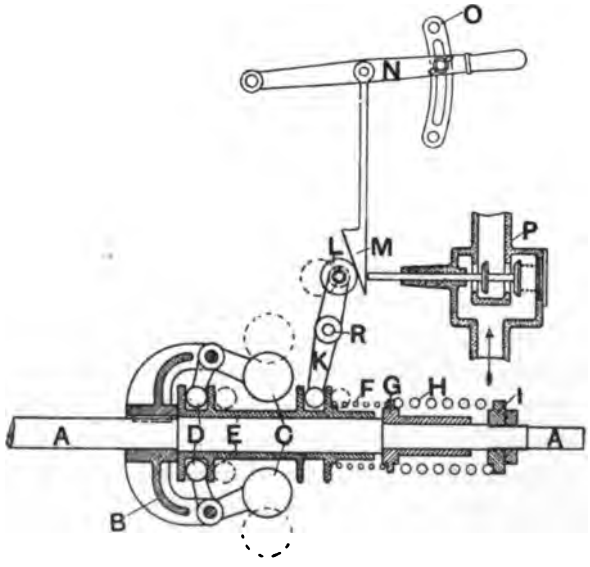

Fig. 30.

governor, which he had designed to meet the special requirements of motor car work, where it was desired to have in the engine a range of governed speeds from, say, 200 up to 1000 revolutions per minute. At low speeds the governor acted against a light spring, F, and as the speed increased it took up a stiffer spring, H, and these were so proportioned as to give a fairly straight characteristic between the speed limits for which the governor was designed. While the centrifugal part of the governor had a very long travel, the throttle valve was so arranged that a very short travel sufficed to move it from full-open to closed.

Mr T. Blackwood Murray.

The throttle valve was operated through the lever K, which moved on a fixed fulcrum pin R. The speed at which the governor acted was determined by the relative position of the throttle valve, and the roller L, and this was controlled by the driver from the hand lever L by inserting or withdrawing the wedge W. If the wedge was only slightly inserted the governor would act at a low speed; if further inserted, at a higher speed; if fully inserted, at the top speed for which the governor was designed. Thus, the governor might be set to hold the car at any desired speed, or in other words to follow up the desires of the driver. He was afraid that Mr Govan, in page 247, had fallen into the popular error which was often seen in semi-technical motor papers, that the longer the stroke in proportion to the bore the greater was the advantage that could be taken of expansion. The amount of expansion depended, of course, solely upon the ratio of the clearance volume to the volume swept by the piston, and was therefore independent of the ratio of bore to stroke. Designers had been mainly guided in their choice of ratio of bore to stroke by such considerations as making the ratio of the area of the walls of the combustion space to the volume as small as possible; and on the one hand the choice of a large bore and a short stroke made the frictional losses in the crank shaft excessive, while on the other hand, a very long stroke was undesirable, as the connecting rods might not exceed certain dimensions, owing to overall dimensions being limited. The two-cylinder engines described on page 247 would, according to his calculations, with 62 lbs. mean effective pressure, at 1500 revolutions per minute, only give 11 indicated horse power. Taking an efficiency of 80%, this gave a B.H.P. of 8·8 instead of 11 B.H.P. as stated by Mr Govan. To give 11 B.H.P. it would require a mean effective pressure of 77 lbs. per square inch. With a compression pressure of 60 lbs. per square inch above the atmosphere, there should be no difficulty in getting an explosion pressure of 240 lbs. per square inch above the atmosphere. The pressure of 150 lbs. which Mr Govan

mentioned appeared to him to be very low. As to friction clutches, it was of course quite possible to make a friction clutch of the type in Fig. 16, which would exert no end of pressure when in gear, and, as a matter of fact, this was done by a number of makers. It was only necessary to insure that the thrust of the spring was taken up on the crank shaft itself. It made a much simpler arrangement than that shown in Fig. 15, as the rim of the fly-wheel might be coned out to receive the clutch, thus obviating the necessity for a loose ring. As to side chains, they had had the very important advantage of permitting the use of a very simple dead rear axle, and they could be quite efficiently protected without completely covering them in. Regarding frames, it seemed to him that there could be no doubt that the channel section if properly stayed to prevent it from buckling was very much stronger than the U section. He had made a rough calculation of two sections bent from the same plate of steel. The channel gave a moment of resistance of 1·5, whereas the U section only gave 1·16. That was to say, the channel section was 30% stronger than the U.

Mr John Riekie (Member) observed that while he could not enter very much into the discussion of the internal combustion engine (as he knew little about that class of engine), he was an enthusiast in all matters pertaining to steam and the steam engine. He did not think the internal combustion engine would carry everything before it. Mr Govan admitted that for heavy vehicles steam would largely be used, but he should like to ask him what would prevent steam being used when applied to lighter vans and small pleasure cars? It appeared to him that it would be quite practicable to improve the steam car and make it still more popular, and this appeared to be so when the comparison of speed between the steam locomotive engine and the petrol engine was considered. Steam showed most favourably in the case of climbing a hill. With steam there would be no necessity for friction clutches, nor for cutting down the strength of the material to reduce the weight. Personally, he saw no reason why iron

Mr T. Blackwood Murray.
tyres should not be used in future for cheap cars which ran at a reasonably slow speed, and so dispense with the enormous expense of pneumatic tyres. It was only necessary for manufacturers to take up this branch of the motor car industry to ensure it being made equally popular if not more popular than that of the petrol engine.

Mr W. M'Whirter (Member) considered there were many good points in Mr Govan's paper, and some that, no doubt, would be considerably amended, or, at any rate, altered. A good deal had been heard about electric motor cars made in America, but while there was no difficulty about the cars themselves, there was trouble with the batteries. He had had the pleasure for a good many years of using a reciprocating steam engine running up to 1000 revolutions, and it was very successful, never giving trouble of any kind. This was over a period of close on 20 years ago, and there must have been considerable improvement made in that time. One point that had a great deal to do with the question of speed—a point about which Mr Govan said nothing at all—was not so much a question of measuring the piston speed as of the number of reciprocations per minute, which, in an electric motor, was got over entirely. He believed that some day Mr Govan or Mr Murray, or one of those gentlemen who were devoting so much time to this subject, would produce a satisfactory battery, when the petrol and the steam cars would be consigned to the scrap heap. He really thought that the car of the future would be an electric car, and to bring that about was wholly and solely a matter of the battery. Some day, no doubt, instead of proceeding on the lines of reducing the voltage of the accumulator by one-half, some one would make an accumulator of about 4 volts, and then the problem would be much nearer solution than it was now. Regarding ignition, those who had had experience with small storage batteries knew what a nuisance they were. Mr Govan dismissed this point very neatly; he simply said that all one had to do was to put it on in place of a 16 c.p. lamp, or in circuit with a 16 c p. lamp. That was very nice; the button was pressed, and

electricity did the rest. Mr Murray had not gone quite far enough to tell them the difference between the current required for 100 volts 16 c.p. lamp and that for 250 volts, such as was used in Glasgow. Motor car users—he hoped he would be excused for saying it—were very ignorant concerning accumulators. They had an idea that all they had to do was to charge an accumulator, and if they were not charging it quick enough to charge it longer; that, however, was a great mistake. There was a certain current below which any accumulator got very little benefit in the way of charge, and there was the same danger if too much current were used. Motor car users ought never to leave their cells uncharged, although to leave the cells uncharged was a common practice. A motorist out for a week end might, in returning, allow his car to lie idle until the next Thursday or Friday, and if the cells were allowed to run down they would be ruined. On recharging them the motorist would say that they had come back out of order, and that the damage had been done at the charging place. The subject of motor cars was a very interesting one, and it was quite right that more papers dealing with it should be brought before the Institution. No doubt Mr Murray was willing and able to give one or two, and he thought Mr Parker should look after that.

Mr Owen R. Williams B. Sc., (Member) said that at a meeting of motorists held lately several gentlemen had given the total cost of running their cars, exclusive of depreciation, to be about 3d per mile. The cost of the tyres came out at about equal to the cost of the petrol. Solid tyres meant the loss of a good deal of comfort, and he did not think that to have solid tyres was altogether economical. It was pleasure and comfort that motorists seemed to think about. It had been stated in some of the papers that, a car driven by an engine of 6 horse power, which revolved at about 1500 revolutions per minute, had travelled 50,000 miles without undue wear to the engine. He was sorry that nobody had touched on the matter of Mr Govan's gear box. That arrangement was considered to be one of the cleverest, as it enabled three speeds to be obtained with the minimum amount of

Mr Owen R. Williams.

sliding gear wheels. That gear box, he believed, had been awarded a medal in a recent reliability trial.

Mr JAMES COATS (Member) remarked that, in connection with the friction clutch, Mr Govan at one part of his paper said:—"Through a well-defined friction clutch of 11 inches diameter, 11 H.P. at 1500 revolutions can safely be transmitted. . . . Clutches having this relation of diameter to power are found to give very satisfactory results, and require little or no attention." At another part of the paper, Mr Govan went on to say that change gears operated by friction clutches were adopted by some makers. He thought that was a very good method to operate the gear with, because when hill climbing or reversing often the gear wheels got worn down very quickly, and they had to be renewed. It would be a good thing if motor builders gave more consideration to the design of friction clutches. The author said that change gears operated by friction clutches had always been made too small in diameter, and if made large enough the gears would be much too bulky. He understood that there were gears in the market that did away with the whole of this group of gear wheels. For four speeds there were eight pinions, and for reversing other two wheels were required. It would be much better to do away with

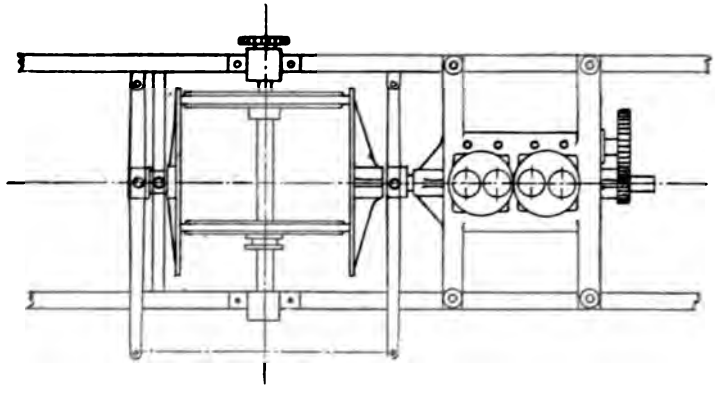

Fig. 31.

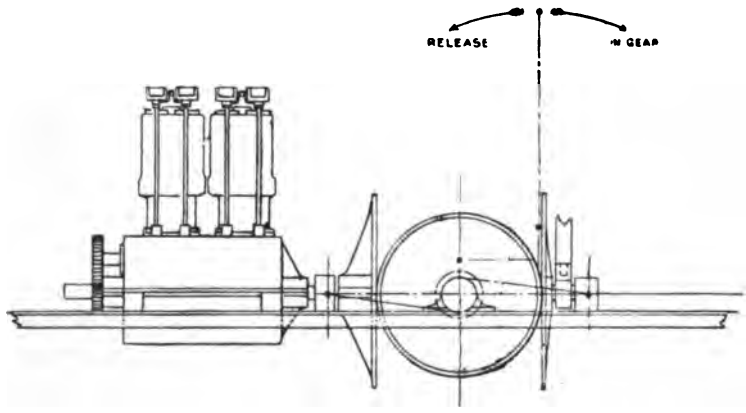

Fig. 32.

all these wheels, and the gear with which he was best acquainted had a friction clutch by which a variation of speed of from 20 miles an hour to a foot an hour could be obtained. Figs. 31 and 32 illustrated this gear.

Mr G. C. THOMSON (Member) observed that Mr Govan, at the last meeting, in speaking about friction clutches mentioned one, which, from the description, he took to be the old Weston brake, but he found no mention of it in the paper, and he would be glad if Mr Govan could give some information on that point. He had found the Weston friction-clutch to give satisfaction in every case where he had used it.

The CHAIRMAN (Mr E. Hall-Brown, Vice-President) said he was pretty well acquainted with Mr Govan's ideas on motor car work, and he had listened with great pleasure to what he had to say at the last meeting with regard to his paper. A number of gentlemen had criticised the paper, and he thought that possibly some of these criticisms were just. He did not, however, think that Mr Murray was right in saying that the principal reason for having a variable point at which the spark was passed into the machine was the lag of the coil. This lag was practically constant and they

Mr E. Hall-Brown.
all knew that in ordinary gas engine work, the speed of the engine entered very largely into the question of the point at which the spark should be passed into the mixture, a certain time being required for the propagation of the flame into the mixture. When an engine was running at 250 revolutions per minute, the time occupied in inflaming the mixture bore a less proportion to the time occupied by the working stroke than when the engine was running at 500 revolutions per minute, and consequently the spark would require to take place at an earlier point of the revolution at the higher speed. He did not say that the same result could not be attained in other ways, but he thought that that was probably one of the most important reasons for providing means for regulating the point at which the spark passed into the mixture. Like Mr Riekie, he did not quite think that Mr Govan's figures as to speeds of piston and rubbing surfaces were conclusive; but he appreciated highly the results which had been attained by these petrol engines which could be run at speeds of 1500 revolutions per minute and even higher for very long periods with very little wear. With regard to the influence of weight on motor car design and efficiency, if he did not quite agree with all Mr Govan had said, he fully appreciated the fact that if a car weighing 15 cwt. could be made as reliable as one weighing 30 cwt. and capable of carrying the same load, then the lighter car would be much more efficient than the heavier one; and he considered that high class material and careful design had resulted in the production of some light cars which were actually stronger and more reliable than some cars of greater weight.

Correspondence.

Prof. ARCHIBALD BARR, D.Sc. (Member of Council) considered that a paper dealing with motor cars in their present state of development naturally raised many questions for discussion. The conditions to be accomplished in the design of motor cars to meet various needs were so diverse that, progress was necessarily made along many divergent paths, and the questions as to which of a variety

of systems of providing for any one of the functions of the machine was best, could only be answered for one type of car at a time, and then only when all the conditions to be accomplished by the car were kept in view. Broadly, he supposed cars might be divided into (a) heavy freight carrying vehicles; (b) pleasure and business carriages; and (c) racing machines. It was to the second of these specially that Mr Govan's paper referred, namely, such cars as were used in place of private carriages or cabs or traps. Of these again the paper dealt more particularly with cars of moderate size, and any observation of his upon the paper would have reference only to cars of moderate size, power, and speed, such, for example as might cost from £300 to £500, according to present rates. His experience of motor cars was very limited, but he had studied the problems involved in their construction. On page 246 the author raised the question of "efficiency" of the engine "per pound weight." He did not think that that was a question of first importance to the purchaser or user of a car. What the purchaser had to consider (assuming a certain average weight to be carried, in the shape of passengers and luggage, and a certain mileage per annum) was what details of construction would lead to the greatest efficiency in terms of interest on original cost, depreciation and cost of repairs on the one hand, and on the other greatest comfort in travelling both with respect to smoothness of running, and freedom from annoying breakdowns. When considered in these connections, he could not see that the securing of a minimum weight of engine per horse power should bulk at all largely in the mind of an intending purchaser. Certainly it was not as the author stated "the most important factor in motor car design." Taking the cost of a car at, say, £400, and allowing interest at 5 per cent and a depreciation of 15 per cent, exclusive of tyres (not an excessive allowance), then the annual fixed charges would be £80, and even if no driver was kept the cost of supplies and repairs could not be taken at less than, say, £30. A very modest estimate of the annual cost of running a moderate sized car was therefore £110. The weight of such an

Prof. Archibald Barr.
empty car as was under consideration would be, say, 1800 lbs, and adding for three occupants other 400 lbs. gave a total weight of 2200 lbs, to carry. Now Mr Govan put the weight of the two-cyclinder engines, running at fifteen hundred revolutions per minute, at 194 lbs. say 200 lbs. If the engine were designed to give the same power at one thousand revolutions per minute the weight would not probably be more, than 300 lbs. or 5 per cent extra on the total load to carry. To provide for this 5 per cent extra power might be required which would hardly at all add to the total weight. For the same efficiency of engine then the petrol bill would be increased perhaps 5 per cent. and since the whole bill for petrol for a year would probably not exceed £20, the extra cost for carrying the slow running engine might be about £1 per annum. He would be inclined to spend that extra to have an engine running at one thousand revolutions per minute instead of fifteen hundred, and would expect an excellent return in the reduction of depreciation, and risk of breakdowns. In any case the cost was very small compared with the total cost of keeping and running a car. On page 258 the author stated that "The speed at which the engine shaft is running when giving off full power practically determines the weight of the whole car." He failed to see that that was so. Certainly a high speed of engine would not lighten the car body—a considerable part of the whole weight—nor materially the weight of the frame, wheels, springs, main axles, steering gear, and many other parts. It affected the transmission gear; but when it was remembered that the speed, even in the case of the slowest running engine must be greatly reduced before the wheels were reached, he could not see that it would greatly affect even the weights of the transmission gear. The author should modify such a sweeping statement as that quoted. Though the figures assumed might not be accepted as a good average (they were he considered on the lenient side as a criticism of the author's contention), they would suffice to show that the weight of the engine per horse power was hardly the most important question from the user's point of view. He should

therefore be disposed to choose a much slower engine speed than the fifteen hundred revolutions per minute advocated in the paper. The question of chain drive *versus* live axle opened up a large question for discussion, and he thought it could not yet be definitely decided. In making a rough estimate of the annual cost of a car, he omitted the cost of tyres. The author correctly said that the tyre bill was one of the biggest items in the running costs of a car. It was the most important question when speaking of cars otherwise of good sound construction. When one heard of anything up to twenty punctures in a day, of burst tyres causing nasty accidents, of long detentions on country roads in bad weather, of appointments missed, and all the other ills that pneumatic tyres were liable to bring to their owners, not to speak of something like doubled cost of keeping and running a car, it should take a great deal of persuasion to induce any one of the "moderate motorist" type to accept a car with pneumatic tyres. No doubt pneumatic tyres have been greatly improved of late, and probably country roads may be made better, and loose stones, broken glass, nails, and other like objects, for which air tubes seem to exercise a wonderful attraction, would be abolished; but speaking to-day of conditions as they were found, alike as regards economy and comfort, solid tyres were greatly preferred. The chief objection to their use was that they undoubtedly involved a stronger and heavier design of car in some features, such as wheels, springs, frames, and so forth. But even if the car as a whole, would, for the same security, require to be one-and-a-half times heavier than a car for like duty fitted with pneumatic tyres, the extra cost of the car, and of the more powerful engine required to drive it, and the extra cost of petrol to run it, would only amount to a fraction of the extra cost of maintenance of pneumatic tyres. From the point of view of commercial efficiency, therefore, he was convinced that for cars equally well designed for the two kinds of tyres respectfully, the solid tyres were to be preferred, No doubt, the bicycle was responsible for the vogue of pneumatic tyres in a very large measure; but cars were mounted on springs while bicyles,

Prof. Archibald Barr.
as a rule, were not, which made a vast difference ; and if motorists looked into the cost of maintenence as well as the initial cost, they would conclude in favour of solid tyres, even though they might not have had the experience of what it meant to have a burst tyre in a blizzard on a country road twenty miles from home. All would-be motorists of moderate means should read the delightful reminiscences of Major Watson, in his book on the Modest Man's Motor. The Institution was fortunate in having a paper presented on the subject of motor cars at this time, and Mr Govan deserved the best thanks of the Members for bringing forward the subject for discussion.

Mr A. S. Biggart (Member of Council) was, over 30 years ago, as a boy, deeply interested in a steam motor car made in a small engineering shop for a friend in Ayrshire. The crude article of those days had been replaced by the well designed and well made car of the present day. So far as his observations went, he thought there was a large field still open for pleasure cars, but the field open to vehicles for commercial purposes was, in his opinion, very much greater. The subject was a very wide one, and he trusted that in the future other papers equally as good as Mr. Govan's, would be read before the Institution. For some time he had been directly interested in the work of a steam motor wagon. This had been used for transporting material from a quarry to the railway station and other centres. In a case of this kind the quantities available for transport was large, so that full and regular loads could be got. The result of the working of this wagon for a very considerable time was that, the rate of carriage had been reduced from one shilling to five pence per ton ; after allowing 10 per cent. for depreciation, interest on capital, and an item for upkeep which more than covered the cost of any little repair. The wagon had worked to everyone's entire satisfaction, and he might almost add without the slightest hitch since it began work some years ago. He quite agreed with Mr Govan that the local road and other authorities have to their own hurt, as well as that of the country, kept back the development of all kinds of cars for many years, and had these

same bodies their own way still, there was little doubt that they would inflict, on the country districts especially, further injury. Objections had been raised to the wagon he had mentioned passing over some of the roads and bridges. The local authorities maintained that some of the bridges were too light for its eight tons, while at the same time they considered them strong enough for their own fifteen ton road roller to pass regularly over. Further they got an engineer to report on the matter, and suggested that the loads should be limited to something like two tons and the speed to that of a few miles an hour while passing over these bridges; notwithstanding that very shortly before road metal was rolled into the road of one of the bridges with a heavy road roller weighing some fifteen tons. Given fair conditions there was little doubt that many remote districts in the country might be brought near to the centres of industry and even themselves become more prosperous by the use of motor cars. As feeders for railways and in the hundred and one services they were adapted for, there was a great future before them, and if Mr Govan's advice was taken to heart, there was little doubt that Glasgow would in the future be one of the centres of the motor manufacturing industry. The discussion would probably turn on the merits of steam, petrol, and the probable great future field here for electricity. So far as his experience went he did not think there was anything yet that had been found so reliable as the steam car, and while it had many inconveniences he still thought there was a great future for it.

Mr Rankin Kennedy (Member) considered Mr Govan's paper of interest as placing before the Institution the details of an up-to-date auto car, with special reference to one particular type. It was to be regretted that the author had not treated the subject in a more general manner. The fashionable or conventional auto cars were necessarily all much alike in details, so that a full description of one sufficed to furnish pretty clear ideas of the construction of others. It seemed a pity that a new industry should be so much trammelled by "fashion." There were no

Mr Rankin Kennedy.
less than fifteen debatable points in the construction of fashionable auto cars. He had no intention of referring to all these points, but would allude briefly to the gear for the transmission of power. The numerous parts of a motor car's gearing when spread out was striking in its complexity. First there was the clutch; then the gear box, to provide the different speeds and reverse motions; and finally, a differential gear box, in order to allow of different road wheel speeds. Speaking of auto cars in general, fitted with all these gears, it was plain that it was only a matter of time when the wheels would wear loose in fit and become noisy; and he would like to draw attention to other systems of power transmission on auto cars, which, although not fashionable, should not detract from their interest to engineers, more particularly to cars which had been called petro-electric-cars, having petrol motors with electric transmission of the power. Instead of all this mass of gear wheels, shafts, clutches, levers, and bearings, a dynamo was fitted to the engine, the armature forming the fly-wheel, and two electric motors fed by the dynamo were geared by single reduction, or chain gear, to the driving wheels. A controller, like that on an electric tram-car, controlled the speed and reversing, and also performed the steering by varying the relative speeds of the two driving motors. This system had been tried in practice on road vehicles with qualified success, and the want of entire success was not far to seek in the cars tried, as the crude design of the electrical transmission was painfully obvious. The whole result of electrical transmission depended upon absolutely correct design and construction of the electrical machinery, and for motor car purposes the common dynamo and motor was not well suited for the work. It required a special design by an expert. This had been properly carried out by the North-Eastern Railway Company in the petro-electric-cars, now running over its system, and clearly demonstrated in a very practical manner that electric transmission could be successfully applied. Of course, the machinery for a large-powered car like that used on a railway was not suitable for small road cars; but by carefully considering

the conditions, dynamo-electric machinery for smaller cars could be made to perform the work satisfactorily. Briefly, the dynamo was multipolar, with an armature of the gramme ring slotted core type, large in diameter, and running at a high angular velocity, and taking the place of the usual fly-wheel and clutch. By a special winding of the armature no separate commutator was required, as the armature conductors formed the commutator. The machine was thus reduced to its simplest elements. As the power had not to be transmitted a distance of more than a yard or two, very low electric pressure could be adopted—from 20 volts to 30 volts, good substantial conductors, switches and fuses, and other electric fittings being used. A few cells of a secondary battery was provided for ignition, and also for starting the engine, the dynamo acting as a motor for a few revolutions. The motors were of the same design as the dynamos. The steering of the

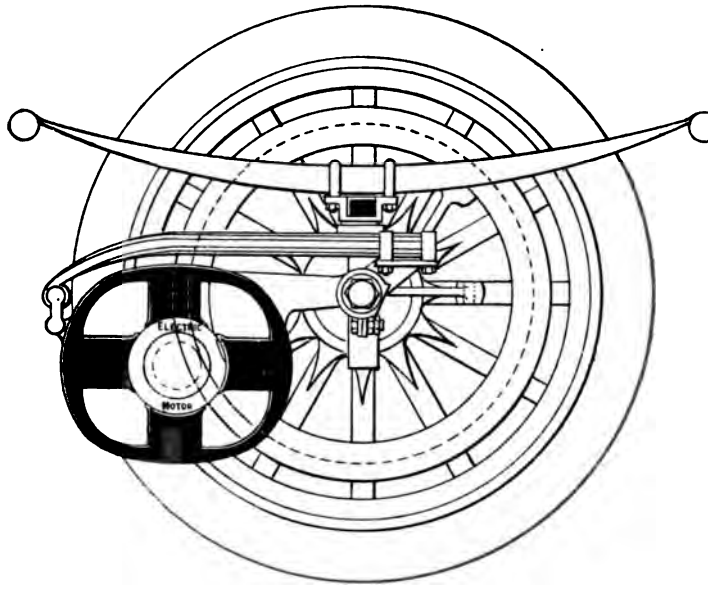

Fig. 33.

Mr Rankin Kennedy.

vehicle could be controlled by an electric switch, so that when running straight both motors were of the same speed and power, but to swerve or go round in a circle the outer motor was made to run faster and the inner motor slower, or *vice versa*. Some gearing was, of course, required, either side chains or spur-wheels, between the motors and the driving wheels; but the substitution of electric for wheel transmission very obviously did away with, at one sweep, all the gears—steering gear, differential gear, speed and reverse gears. Further, the engine and dynamo might be supported on springs as well as the motors, as shown in Figs. 33 and 34, a side view and plan respectively showing one motor.

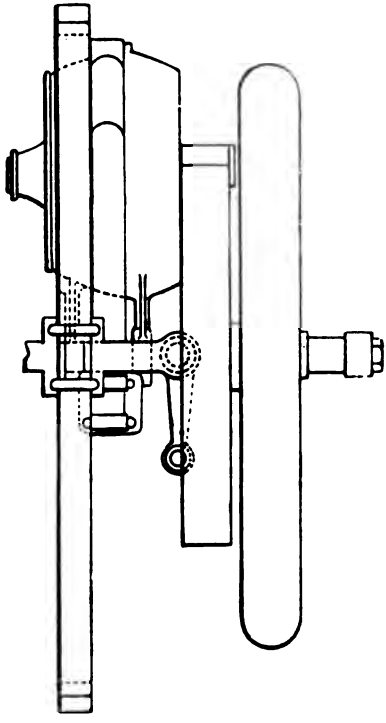

Fig. 34.

Now, if the engine and motors were properly borne on springs, there was not the same necessity for pneumatic tyres on the wheels of the car. It was due to the necessarily rigid connection of the frames, the engines, and the gearing, that pneumatic tyres were indispensible on mechanically-geared auto cars.

Mr GOVAN (in reply) said it would be quite impossible for him to deal with the whole of the points that had been raised, but he would deal with them in the best manner possible in the time at his disposal. The first of the correspondence read dealt with steam, and it had been generally admitted by all the speakers that it was quite impossible in one paper on motor cars to deal with the whole of the different methods of power application to road vehicles. His paper, as it stood, was merely an introduction of the subject of motor cars to the Members of the Institution. Regarding the application of steam, there had been many attempts at making steam-propelled vehicles, but unfortunately none of them could really be considered as commercial successes. There was the locomobile which was in the ascendency three years ago, and to which the judges at the trials which were made at the Glasgow Exhibition went out of their way to give two special gold medals because of the possibilities which they thought were contained in the steam vehicle. To-day such cars were no longer sold; at least, if they were sold it was in very small numbers and at a greatly reduced price. Further, there was the fact that the Loco-Mobile Company of America had continued to the best of its ability to try and improve its system and had latterly adopted a petrol-driven vehicle to manufacture at their works. He thought that more would be obtained from practical fact than from going into all the theory of the matter. The chief points Professor Barr seemed to object to were the high speed engine and the pneumatic tyres. If the paper were read carefully it would be seen that the whole argument in favour of high speed in general was brought out in the comparisons he gave, but he would like in passing to say that, the statement that the speed at which the shaft was rotating when giving the maximum power practically determined the weight of

Mr Govan.
the remaining parts of the chassis. It simply came about in this way, that speed meant power, and if one kept down the weight of the engine, the weight of the gearing and the wheels, and combined that with pneumatic tyres—another point in motor cars that was full of controversy—the whole combination was brought down to a light weight. It was apparent that the lighter the car the less would be the wear on the tyre, and to-day that was the biggest cost item in running a vehicle on the roads. Another point he would like to refer to was that an idea existed that 20 miles an hour was fast enough. He thought it was almost out of place to come before the Members of the Institution for the purpose of trying to advocate high speeds. Everyone knew the price that was being paid for high speeds both on the high seas, and on railways. Speed was a matter that people got used to as time advanced. With regard to statements about 20 punctures a day, that, of course, was overdrawn. He might say that in the last 5000 miles he had driven he had not had one puncture. It would be admitted that the pneumatic tyre was gradually getting better and means were being taken to try, as far as possible, to mitigate the puncture evil. One of the methods was a leather tread vulcanised to the rubber and filled with studs, and this promised in a large measure to do away with the chance of a puncture. Vehicles to which pneumatic tyres were fitted were as a rule capable—dropping the legal limit—of travelling between 30 and 40 miles an hour, and the fact that these cars were designed and run snccessfully at that speed showed in the first place the possibilities of the pneumatic tyre. To run a machine at 20 miles an hour which was capable of being driven at 30 or 40 miles an hour, magnified considerably the factor of the safety of the vehicle. When vehicles designed to run 20 miles an hour were fitted with solid tyres they attained that speed but not more; but if the car were made 25 per cent lighter, fitted with pneumatic tyres, and run at the same rate of speed the factor of safety was very materially increased. Further, if the tyre were designed to stand the racket of running between 30 and 40 miles an hour, and the speed was reduced to 20 miles

there was very little chance of puncture. He found that the bulk of punctures were got after the rate passed 20 miles an hour. Mr Murray had made some remarks concerning a carburetter which was used with a gauze over the air opening to strain the moisture, and he might say that this type of carburetter was that chosen by the Committee of the French Auto-Mobile Club, as being the best carburetter to test all others by. Regarding the charging of accumulators, it was quite impossible for him to go into every detail of that matter, and it was well enough known that car users very rarely charged their own accumulators. They took them to their local car man or electrician and had them charged. As to the spark in the high tension ignition, it was admitted that an advance attachment was put on to the magneto-ignition, and if any advance was to be made at all, it might as well be made a little bit further. He believed that the magneto-ignition would one day hold the field. He had had very considerable experience in fitting the magneto-ignition known as the Sims-Bosch, which was perhaps the best known in the market, but this could not be considered satisfactory in the opinion of the bulk of motor car users. Mr Sims had been constantly in touch with Mr Bosch, the inventor of the system, and these two gentlemen had been for years working on a high tension ignition which did away with one objectionable feature from which a great deal of trouble seemed to arise. Governors could be made now to govern the engine practically at any speed. Here again he might say, the paper was merely a sketch and simply brought forward various points which had given trouble within the last year or two. Regarding side chains, it had probably been noticed that during a test with a Napier car in which an attempt was made to run 2,000 miles from John o' Groats to Land's End and back, and over devious routes, the chain-driven gear failed in climbing very steep and rough roads in the Highlands, which he had known to be negotiated with live axle cars to the satisfaction of the users of those cars The question of iron tyres simply brought him back to what he had already said. People desiring maximum comfort could only

Mr Govan.
obtain it from pneumatic tyres, not from iron or solid tyres. Small batteries for cars could now be got that would run 1,000 miles without recharging, and when this could be done and a spare battery could be carried, also if a car user could get in touch with one who was able to charge the batteries properly, there did not seem to be much objection on this score to high tension ignition. Mr Coats raised the question of the application of friction clutches to the gear. He scarcely followed what he meant, but he would describe what he thought he meant. There was a disc on the main shaft and an attachment which was made to slide along the face of the disc. When this was moved the speed was accelerated or slackened as the case might be. The difficulty appeared to be that it required continual adjustment so as to get a sufficient grip on the disc. He submitted that the device was not a practicable one. It had been tried both on the Continent and in America, but without success. It was his opinion that the adoption of high speeds and pneumatic tyres and the reduction of weight were the only means of gaining greater economy and more efficiency, and, further, probably a reduction in the price of the car to the public, which was a thing it was crying out for. He thanked the Members of the Institution present for the manner in which they had received his paper,

The CHAIRMAN (Mr E. Hall-Brown, Vice-President) said they were all very much indebted to Mr Govan for his paper, which had led to such an interesting discussion. The French, as Mr Govan had remarked, had taken a lead in this matter. Frenchmen had been at it for a long time and had made great strides, but now that the industry in their own neighbourhood was assuming such great proportions, he hoped the Institution might look upon this paper as the first of a series on motor cars. He proposed a hearty vote of thanks to Mr Govan.

The vote of thanks was carried by acclamation.

CONVERSAZIONE AND EXHIBITION.

On the evening of Friday, 16th October, 1904, a Conversazione was held in the St. Andrew's Halls, Glasgow. About 800 ladies and gentlemen attended, and, in the absence of the President, were received by Mr James Gilchrist, Vice-President, Miss Gilchrist, and the Members of the Council.

During the first part of the evening a promenade concert was given in the Grand Hall, and after nine o'clock dancing commenced, the Kent Hall having been reserved for refreshments. A cinematograph display took place at intervals during the concert and between the dances.

A most interesting feature of the entertainment was the exhibition of models and apparatus connected with engineering and shipbuilding, displayed in the Berkeley Hall. An exhibit of considerable interest was shown by Messrs Kelso & Co., Glasgow, who had on view a section of a modern battleship used for instructional purposes on board H.M.S. "Britannia," and various models of boat-lowering apparatus and devices for housing lifeboats. Messrs Kelvin & James White showed a varied collection of their well-known electrical specialities for use on board ship. These included electrical measuring and testing instruments, and the latest form of Lord Kelvin's ship's compass, in which the compass card is illuminated by electric light from below. Messrs W. C. Martin & Co. illustrated, by model and otherwise, the installation of electric light on board ship. Messrs John Brown & Co., Clydebank, showed a model of the T.S.S "Moskva," built by them for the Russian volunteer fleet; and Messrs William Denny & Bros., Dumbarton, exhibited a model of the T.S. yacht "Lysistrata." Messrs Craig & Donald, Johnstone, showed a shearing and notching machine; while Messrs Schaffer & Budenberg had on view a large collection of their specialities. These and other exhibits attracted considerable attention, and promoted the success of the evening.

THE "JAMES WATT" ANNIVERSARY DINNER.

THE "JAMES WATT" ANNIVERSARY DINNER under the auspices of the Institution was held in the Windsor Hotel, St. Vincent Street, Glasgow, on Saturday evening, 23rd January, 1904. There was a large and representative gathering, the company numbering upwards of 320 gentlemen. Mr JAMES GILCHRIST, Vice-President of the Institution, occupied the chair, and the croupiers were Mr E. Hall-Brown, A. W. Sampson, and James Weir. The Chairman was supported by The Hon. The Lord Provost, Sir John Ure Primrose, Bart.; The Right Hon. Lord Inverclyde; The Marquis of Graham; Captain J. G. Heugh, R.N., D.S.O.; Colonel A. B. Grant, V.D.; Dr. John Macintyre; Mr Robert K. Gray, President, Institution of Electrical Engineers, London; Provost Kennedy, Partick; Mr John Ward; Deacon-Convener Goldie; Mr Thomas Kennedy; Mr John G. Kerr, LL.D.; Mr Andrew Lamberton, President, West of Scotland Iron and Steel Institute; Prof. A. Barr, D.Sc.; Dr. F. Gracie; Engineer-Commander W. E. Onyon, R.N.; Mr Alexander Gracie; Mr Robert Harvey; Mr R. T. Moore, B.Sc.; Mr George M'Farlane; Provost M'Farlane, Dumbarton; Mr J. E. Harrison, President, Glasgow Association of Students I.C.E.; Mr J. G. Dunlop; Provost Findlay, Motherwell; Mr W. A. Chamen, President, Glasgow Section Institution of Electrical Engineers; Mr Alexander Cleghorn; Mr Richard Ramage; Mr A. C. Patrick; and Mr Edgar W. Richards.

Apologies for Absence were intimated from The Duke of Argyll; Lord Blythswood; Lord Overtoun; Sir Digby Murray, Bart.; Sir William White, K.C.B.; Sir John Durston K.C.B.; Sir James Williamson; Colonel J. M. Denny, M.P.; Mr J. Parker Smith, M.P.; and Professor J. Hudson Beare.

After dinner the loyal toasts were given from the chair and duly honoured.

Mr John Ward.

Mr JOHN WARD proposed "The Imperial Forces." He remarked that the necessity for the sufficiency and the efficiency of the Imperial forces was now recognised as above and beyond all party politics. The engineering branch of the Navy demanded and deserved better treatment than it had hitherto received from the Admiralty. In the fighting of the future this branch would have to be more relied upon, and no grievance under which it suffered should be left unremedied. The lessons of the South African war, which had been learned at great cost, had revealed defects in our Army system. These had been admitted, and he regarded with satisfaction the determination of the new War Minister to have them removed.

Captain J. G. HEUGH, R.N., D.S.O., in replying, said that the Navy had never been in so efficient a condition as it was at present. The finest fighting machines that the world had ever seen had been built on the Clyde. He thought that the Clyde shipyards might go one better and give their assistance in manning the Navy. Fully 400 men from the various shipyards and elsewhere had already joined the Naval Volunteers. He hoped that the *personnel* of this branch of the Navy would be greatly increased by men from the yards in which the ships were produced.

Colonel A. B. GRANT, V.D., who also acknowledged the toast, remarked that there was good reason to hope that what the War Minister meant to do for army reform would be on thoroughly practical lines.

The CHAIRMAN (Mr James Gilchrist) said that for many years—he might safely say for half-a-century—the toast of "The Memory of James Watt" had been given the position of greatest prominence at the "James Watt" dinner. A few years ago it was thought that the practice of making it the principal toast might be discontinued, and consequently, for several years, it was not included in the list. But the committee in charge of the dinner arrangements were of opinion that it was appropriate that the memory of James Watt should be at least formally honoured. He was not going to revive the custom of delivering an address upon the

The Marquis of Graham.
character and the work of Watt; he simply asked that his name should on that occasion be remembered.

The toast was honoured in silence.

The Marquis of GRAHAM proposed "The City of Glasgow." Alluding to the claim of Glasgow as the second city of the Empire, his Lordship said he had been wondering what city came before it, and he had come to the conclusion that if it were second at all it was second to none. The character of the great municipal institutions justified pride in their city.

Lord Provost Sir JOHN URE PRIMROSE, Bart., acknowledged the toast. He shared Lord Graham's view that in the main Glasgow rightly claimed to occupy a very forward place among the municipalities of the Empire. He believed there was a strong and sound civic spirit underlying the citizens. We had made many adventures and advances in municipal government, but it seemed to him appropriate that on an occasion when they were celebrating the memory of one who rendered great service to Glasgow, to the world, and to humanity, he should suggest that there was a problem before them as a community which had arisen as the result of the introduction of the steam engine. The smoke-laden atmosphere of Glasgow was a reproach. Steps were being taken to purify the Clyde, and remove the reproach due to the condition of the river. Surely science was not so barren, and intellects were not so inept that something could not be done to remove the smoke pall from an otherwise beautiful, and, he would add, stately city. He confessed that as a manufacturer in the city he had looked with dismay at the chimney stack attached to the works of his firm, and as one who had tried to preach the gospel of purity and beauty he had felt it incumbent upon him to avail himself of the inventions of many inventors to mitigate that nuisance. He confessed, further, that it had always been a restraining influence upon the governing body of the city in adventuring upon drastic legislation dealing with the matter, that it had to be borne in mind that it was from the industrial undertakings that the citizens derived their material well-being. About three weeks ago another

inventor, who claimed that he had discovered a means of annihilating the smoke nuisance, came the way of his firm. After full consideration they adapted to one of their marine type of boilers a patent furnace, and it had worked for two or three weeks without producing a vestige of smoke, with economy in full, and with the possibility of expansion in the production of power. To him these results had been astounding, and if in every other detail equally satisfactory results were realised, he claimed for the inventor that he had inaugurated a new era alike as regarded the abatement of smoke and consumption of coal for power production both on land and sea. It remained for those who were interested in the invention to carry it out in fullness; but with a trial extending over two or three weeks, working night and day, without smoke from a chimney that was formerly an abomination, he thought there was good ground for being extremely hopeful that a means could be found of removing a foul blot from communal life.

Lord INVERCLYDE proposed "Engineering and Shipbuilding Industries." Going back for only a comparatively brief period, it was remarkable, he said, to note the developments that had taken place in these industries. In Williamson's book dealing with the memories of James Watt, it was pointed out as marvellous that in 1855 ships were being built of such a size that they cost from £40,000 to £120,000. Now we had ships costing ten times the smaller sum, and in many cases more than five times the larger sum. One was almost inclined to wonder where this development was going to stop. As a shipowner he was almost inclined to say to the shipbuilders and the engineers—"Will you never give us peace; are we to have no rest; is there to be no time when we may feel that we have reached something like finality in connection with our ships?" One no sooner thought he had come to the end in some particular direction, than some shipbuilder or engineer came forward with a proposal that one must do something better than his neighbour. Standing almost at the threshold of a new century, one could not help looking backwards and forwards. Looking back, it was interesting to find that at one

Lord Inverclyde.

time such a thing as a steamer with a brick funnel was built on the Clyde. In connection with the question of propulsion, no less an authority than Henry Bell came to the conclusion that the best development of speed was to be got by having two paddle wheels. We had now long got past the stage of paddles, and long past the stage of single screws. Engineers were now considering whether they should be satisfied with twin screws. He had very great doubt in his own mind whether, before long, they would not find themselves with screws all round the ship. The developments of the past fifty years made one wonder as to what might be accomplished within the next fifty years. One of the great topics of the day was the question whether turbine machinery was going to take the place of the reciprocating engine in marine work. Many, no doubt, thought that that was bound to come. If so, unfortunate shipowners would have to put away most of their ships into the scrap heap, or they would find that they were outpaced or out-classed. In connection with the question of turbines, it was interesting to recognise how it was connected with the three countries of England, Scotland, and Ireland. As they knew, the practical adapter of turbine machinery was an Irishman, his works were in England, while the practical carrying out of the turbine engine as adapted to steamers was associated with the Clyde. It was satisfactory to know that the first steamer of the Transatlantic type that was to be fitted with turbines was owned by a well-known Scottish firm. But it was not only in connection with marine engines that development was taking place. It was to be found also in the matter of docks. No harbour in this country or in other countries was standing still. The Clyde Trustees had found that they had to extend their progress in providing dock accommodation and in deepening the river. As practical men, they would agree with him that the Clyde Trustees could not stand still. They must be prepared for even greater things in the future. Every great port in the country was increasing its dock accommodation. Only the other day Liverpool voted a very large sum for building larger

docks, and it already had more docks than any other port in this country. On the other side of the Atlantic, New York was doing exactly the same thing. The harbour authorities there were preparing plans and were going ahead with docks to accommodate vessels 800 feet in length. That showed that they were looking forward in connection with the steamship trade of the future. In connection with all engineering enterprises on shore, development was also taking place. At the present time railway companies were face to face with very great problems. Only quite lately they thought that their developments in speed and in the accommodation of the public were to be upon former lines, but there was no doubt now that they must be prepared to consider the question of electrical traction. Electricity was apparently going to play a very important part indeed in all developments of engineering work. It was impossible to see where progress was to end in that direction. An important question in the future was the consumption of fuel. Whether as shipbuilders, engineers, shipowners, or railwaymen, they would have to consider this question, upon which everything seemed to him to hang—whether they were to get an increased power with a smaller consumption, or in what direction they were to find economy. As a shipowner, there was one other matter in connection with which it seemed to him there must be great developments—namely, the question of stoking at sea. It was quite impossible, he thought, for matters to go on as at present on ships carrying such very large quantities of coal as they had to do for long voyages. There was a great fortune in store for the inventor who could produce a mechanical stoker which would meet the requirements of the case.

The CHAIRMAN, in replying, spoke of the great advances that had been made in all departments of shipbuilding and engineering science, and claimed a large share of the credit for the inventors of the workshop plant, by which shipbuilders and engineers were enabled to produce work of the highest class. Unfortunately a large number of workmen were not so enthusiastic as their employers were to do everything in their power to keep work within

Mr James Gilchrist.

our own shores. If they would put their shoulders to the wheel with the same indomitable spirit that characterised their forebears, one would hear far less about ships being built abroad at much lower prices than they could be built at home. Speaking of the large class of ships that were now being built, he remarked that the Clyde Trustees knew pretty well what they were about. He felt quite satisfied that if Lord Inverclyde's firm placed one of their huge floating palaces on the upper reaches of the river, the Lord Provost would see his way to advise his colleagues in the Trust to make a waterway that would carry her to the sea.

During the evening an interesting programme of vocal and instrumental music was submitted.

MINUTES OF PROCEEDINGS.

FORTY-SEVENTH SESSION.

THE FIRST GENERAL MEETING was held in the Hall of the Institution, 207 Bath Street, Glasgow, on Tuesday, 27th October, 1903, at 8 p.m.

Mr JAMES GILCHRIST, Vice-President, occupied the chair.

After the Chairman's opening remarks, the Minutes of the Annual General Meeting, held on 28th April, 1903, were read, confirmed, and signed by the Chairman.

The new Members elected at the previous Meeting were duly admitted.

ANNUAL REPORT OF THE COUNCIL.

The Chairman said the Council had pleasure in submitting the Annual Report and Treasurer's Statement, and called upon Mr THOMAS KENNEDY, Hon. Treasurer, to move their adoption.

Mr KENNEDY commented upon the financial result of the past year, and suggested that the cost of future awards of Books should be borne by the Medal Funds.

He moved the adoption of the Council Report and Treasurer's Statement, and the motion was unanimously accepted.

LIBRARY AND READING ROOM.

Mr JOHN WEIR called attention to the limited hours during which the Library and the Reading-room were available to Members and considered that both should be kept open, during the winter months, every lawful day till 10 p.m.

PREMIUMS OF BOOKS.

The awards made at the Annual General Meeting of 28th April, 1903, were presented as follows, viz. :—

1 To Mr WILLIAM BROWN, for his paper on "Dredging and Modern Dredge Plant."

2 To Mr A. MARSHALL DOWNIE, B.Sc., for his paper on "The Design and Construction of Fly-wheels for Slow-speed Engines for Electric Lighting and Traction Purposes"; and

3. To Mr J. FOSTER KING, for his paper on "Rudders."

Thereafter, a paper was read by Mr F. J. ROWAN on "Superheated Steam."

A paper, by Mr JOHN RIEKIE, on "Improvements in Valve-Gears," was read by the Secretary.

The following Candidates were duly elected :—

AS MEMBERS.

ANDERSON, ALFRED WALTER, Founder, Blackness Foundry, Dundee.

ARROL, THOMAS, Engineer, 23 Doune Terrace, Kelvinside, Glasgow.

ARROL, WILLIAM, Engineer, 23 Doune Terrace, Kelvinside, Glasgow.

BURNSIDE, WILLIAM, Engineer, 3 Armadale Street, Dennistoun, Glasgow.

DRON, ALEXANDER, Engineer, 59 Elliot Street, Glasgow.

GOUDIE, ROBERT, Engineer, 39 West Campbell Street, Glasgow.

HYND, ALEXANDER, Engineer, Federal Supply & Cold Storage Co., of South Africa, Ltd., Durban, S.A.

KELSO, MATTHEW GLEN, Engineer and Model maker, 47 Oxford Street, Glasgow.

LOWSON, JAMES, Electrical Engineer, 10 West Campbell Street, Glasgow.

MARTIN, WILLIAM CRAMMOND, Electrical Engineer, 10 West Campbell Street, Glasgow.

MOYES, JOHN YOUNG, Engineer, 12 Ruthven Street, Glasgow.

WHITEHEAD, ALEXANDER CULLEN, Engineer, Messrs Whitehead Bros., Engineers, Johannesburg, S.A.

From Associate Members.

MCLELLAN, ALEXANDER, Civil Engineer, 16 Robertson Street, Glasgow.

SMITH, JAMES A, Engineer, Union Bank House, Virginia Place, Glasgow.

From Students.

ANDERSON, GEORGE CARRICK, Electrical Engineer, 13 Balmoral Drive, Cambuslang.

BLACK, JOHN W., Electrical Engineer, 109A West Regent Street, Glasgow.

BLAIR, ARCHIBALD, Chief Draughtsman, 21 Havelock Street, Dowanhill, Glasgow.

BROWN, DAVID A., Engineer, 57 St. Vincent Crescent, Glasgow

CALDER, John, Engineer, Manager, 18 St. Austin's Place, West New Brighton, New York City, U.S.A.

CAMERON, HUGH, Engineer, 40 Camperdown Road, Scotstoun, Glasgow.

CAMPBELL, ANGUS, Engineer Surveyor, 90 Southgrove Road, Sheffield.

CARSLAW, WILLIAM H. Jun., Engineer, Parkhead Boiler Works, Glasgow.

FINDLAY, LOUIS, Consulting Engineer, 50 Wellington Street, Glasgow.

FRASER, J. IMBRIE, Founder, 13 Sandyford Place, Glasgow.

GOURLAY, ROBERT CLELAND, Assistant Manager, Caledonia Engine Works, Paisley.

HENDERSON, CHARLES A., Engineer, The British Westinghouse Manufacturing Co., Ltd., Trafford Park, Manchester.

INNES, WILLIAM, Electrical Engineer, 11 Walmer Terrace, Glasgow.

LAUDER, THOMAS H,, Assistant Steel Works Manager, 38 Chappel Terrace, Parkhead, Glasgow.

LESLIE, JOHN, Ship Draughtsman, Struan, Victoria Drive, Scotstounhill, Glasgow.

LORIMER, ALEXANDER SMITH, Engineer, Glasgow Locomotive Works, Polmadie, Glasgow.

MACCALLUM, PATRICK F., Engineer, 93 Hope Street, Glasgow.

MACFARLANE, DUNCAN, Engineer, 58 Hydepark Street, Glasgow.

MCHOUL, JOHN BOYD, Engineering Draughtsman, 2 Windsor Terrace, Langside, Glasgow.

MCINTOSH, JOHN, Shipyard Manager, 5 Douglas Terrace, Paisley.

MILLAR, THOMAS, Naval Architect, Walker Shipyard, Newcastle-on-Tyne.

MILLER, ROBERT FAULDS, Civil Engineer, 109 Bath Street, Glasgow.

OSBORNE, HUGH, Electrical Engineer, 31 Broomhill Terrace, Partick.

PATERSON, JAMES V., Naval Architect, c/o International Mercantile Marine Co., 305-307 Walnut Street, Philadelphia, U.S.A.

RAPHAEL, ROBERT ALEXANDER, Engineer, Assistant Works Manager, 150 Renfrew Street, Glasgow.

RUSSELL, JAMES E., Engineer, 16 Roxburgh Street, Hillhead, Glasgow.

SEATH, WILLIAM YOUNG, Naval Architect, 121 St. Vincent Street, Glasgow.

TOD, PETER, Engineer, Messrs E. H. Williamson & Co., Lightbody Street, Liverpool.

TURNBULL, CAMPBELL, Consulting Engineer, 190 West George Street, Glasgow.

TURNBULL, JAMES, Engineer, Basford House, Seymour Grove, Manchester.

TURNBULL, WILLIAM L., Consulting Engineer, 190 West George Street, Glasgow.

WATT, R. D., Engineer, c/o Messrs Butterfield & Swire, French Bund, Shanghai.

AS ASSOCIATE MEMBERS.

CLEGHORN, GEORGE, Engineering Draughtsman, 2 Clelland Place, Ibrox, Govan.

FERGUSON, DANIEL, Engineer, 27 Oswald Street, Glasgow.

From Students.

AGNEW, WILLIAM HENRY, Engineering Draughtsman, Messrs Laird Bros. Ltd., Birkenhead.

ARBUTHNOTT, DONALD S., Civil Engineer, 65 Renfield Street, Glasgow.

ARUNDEL, ARTHUR S. D., Mechanical Engineer, Penn Street Works, Hoxton, London, N.

BENNETT, DUNCAN, Marine Engineer, 9 Leslie Street, Pollokshields, Glasgow.

BERRY, DAVIDSON, Electrical Engineer, 21 Grange Terrace, Langside, Glasgow.

DEKKE, KRISTIAN STOLTZ, Shipyard Manager, Bergen, Norway.

DIACK, JAMES A., Engineer, 4 Rosemount Terrace, Ibrox, Govan.

EDMISTON, ALEXANDER A., Engineer, Ibrox House, Govan.

FRANCE, JAMES, Master of Works, 8 Hanover Terrace, Kelvinside, Glasgow.

HORN, PETER ALLAN, Engineering Draughtsman, 29 Regent Moray Street, Glasgow.

HUTCHISON, ROBERT, Structural Draughtsman, c/o Messrs Burns & Co., Ltd., Howrah, Bengal, India.

IRVINE, ARCHIBALD B., Marine Engineer, 3 Newton Terrace, Glasgow.

JOHNSTON, ROBERT, Engineering Draughtsman, c/o MacVicar, 20 Rothesay Gardens, Partick.

JOHNSTONE, ALEXANDER C., Structural Daughtsman, 167 Langside Road, Crosshill, Glasgow.

JONES, THOMAS C., Marine Engineer, 17 Kent Avenue, Jordanhill, Glasgow.

MCGILVRAY, JOHN ALEXANDER, Lecturer in Engineering, 555 Govan Road, Govan.

MCINTYRE, JAMES N., Stalheim, South Brae Drive, Scotstounhill, Glasgow.

MACKINTOSH, R.D., Engineer, P.O. Box 6075, Johannesburg, S.A.

SMITH, JAMES, Draughtsman, 23 Barrington Drive, Glasgow.

STEELE, DAVID JOHN, Electrical Engineer, 41 Albert Drive, Pollokshields, Glasgow.

TAYLOR, JOHN F., Engineering Draughtsman, 23 Roslea Drive, Dennistoun, Glasgow.

WHITELAW, ANDREW H., B.Sc., Engineer, 74 Dundonald Road, Kilmarnock.

WOODS, JOSEPH, Civil Engineer, 58 Dudley Road, Ilford, Essex.

ASSOCIATES.

CAYZER, SIR CHARLES W., M.P. Shipowner, Gartmore, Perthshire.

DAWSON, DAVID C., Shipowner, 12 York Street, Glasgow.

HOPE, ANDREW, Shipowner, 50 Wellington Street, Glasgow.
OVERTOUN, The Rt. Hon. Lord, Overtoun, Dumbartonshire.
SLOAN, ROBERT BELL, Shipowner, 50 Wellington Street, Glasgow.

STUDENTS.

APPLEBY, JOHN HERBERT, Apprentice Engineer, 133 Balshagray Avenue, Partick.
FREER, ROBERT M'DONALD, Electrical Engineer, 14 India Street, Glasgow.
HOUSTON, DAVID S., Engineer, 4 Abbotsford Place, Glasgow.
MCCRACKEN, WILLIAM, Apprentice Engineer, 9 Danes Drive, Scotstoun, Glasgow.
MCMILLAN, DUNCAN, Engineer, 174 Paisley Road West, Glasgow.
MORLEY, THOMAS B., B.Sc., Engineer, 5 Walmer Terrace, Ibrox, Glasgow.
SMITH, JAMES, Jun., Engineer, Darley, Milngavie.
WILLIAMSON, EDWARD H., Apprentice Engineer, 214 Langlands Road, South Govan.

THE SECOND GENERAL MEETING was held in the Hall of the the Institution, 207 Bath Street, Glasgow, on Tuesday, 24th November, 1903, at 8 p.m.

Prof. J. H. BILES, LL.D., Vice-President, occupied the chair.

The Minutes of the First General Meeting, held on 27th October, 1903, having been printed in the billet calling the Meeting, were held as read, and signed by the Chairman.

The new Members elected at the previous Meeting were duly admitted.

The Chairman said he occupied the chair that evening in the absence of the President, who, he was glad to say, was improving very much in health. He felt sure that all present were desirous that their good wishes for a speedy recovery should be conveyed to the President, and this he should have pleasure in doing.

Thereafter the discussion on Mr F. J. ROWAN'S paper on "Superheated Steam" was begun and adjourned.

The discussion on Mr JOHN RIEKIE'S paper on "Improvements in Valve-Gears" was begun and concluded.

On the motion of the Chairman, Mr Riekie was awarded a vote of thanks for his paper.

A paper by Mr RANKIN KENNEDY on "Marine Propellers with Non-reversible Engines and Internal Combustion Engines," was read by the Secretary.

The following candidates were duly elected:—

AS MEMBERS.

ANDERSON, ALEXANDER, Locomotive Engineer, 176 Balgray Hill, Springburn, Glasgow.

BRYAN, MATTHEW REID, Locomotive Engineer, 1 Royal Terrace, Springburn, Glasgow.

DAY, CHARLES, Engineer, Manager, Huntly Lodge, Ibroxholm, Glasgow.

MCINTOSH, THOMAS WILLIAM, Engineer, Manager, 58 Hydepark Street, Glasgow.

NIELSON, JOHN FREDERICK, Electrical Engineer, Messrs John Brown & Co., Ltd., Clydebank.

WILSON, WILLIAM CHEETHAM, Chief Draughtsman, 122 Balgray Hill, Springburn, Glasgow.

From Student.

BOWMAN, WILLIAM DAVID Engineer, 21 Kersland Terrace, Hillhead, Glasgow.

AS ASSOCIATE MEMBERS.

MITCHELL, ALEXANDER ROBERTSON, Engineering Draughtsman, Kilbowie Cottages, Kibowie Hill, Clydebank.

STEPHEN, DAVID BELFORD, Engineering Draughtsman, 14 Whitevale Street, Dennistoun, Glasgow.

From Students.

MENZIES, GEORGE, Engineer, 20 St. Vincent Crescent, Glasgow.

AS A STUDENT.

CORMACK, JAMES ALEXANDER, Engineer, 149 Hill Street, Garnethill, Glasgow.

THE THIRD GENERAL MEETING was held in the Hall of the Institution, 207 Bath Street, Glasgow, on Tuesday, 22nd December, 1903, at 8 p.m.

Mr E. HALL-BROWN, Vice-President, occupied the chair.

The Minutes of the Second General Meeting, held on 24th November, 1903, having been printed in the billet calling the Meeting, were held as read, and signed by the Chairman.

The new Members elected at the previous Meeting were duly admitted.

Thereafter the discussion on Mr F. J. ROWAN'S paper on "Superheated Steam" was resumed and again adjourned.

The discussion on Mr RANKIN KENNEDY'S paper on "Marine Propellers with Non-Reversible Engines and Internal Combustion Engines" was begun and adjourned.

A paper by Mr J. MILLEN ADAM on "An Inquiry Regarding the Marine Propeller" was read

The following candidates were duly elected:—

AS MEMBERS.

DAVIE, WILLIAM, Engineer, 50 Lennox Avenue, Scotstoun, Glasgow.

FERRIER, HUGH, Chief Engineering Draughtsman, 48 Daisy Street, Govanhill, Glasgow.

FORRESTER, JOHN, Engineer, 41 Bothwell Street, Glasgow.

HENDIN, ALEXANDER JAMES, Assistant Chief Ship Draughtsman, 14 Hamilton Terrace, Partick, Glasgow.

MACDONALD, WILLIAM, Engineer, 48 Dalhousie Street, Glasgow.

WILSON, JOHN, Engineer, 256 Scotland Street, Glasgow.

From Associate Members.

CRIGHTON, JOHN, Assistant Shipyard Manager, Claes de Vrieselaan 137, Rotterdam.

From Students.

BROWN, JOHN POLLOCK, Civil Engineer, 2 Parkgrove Terrace, Glasgow, W.

COCHRANE, JAMES, Chief Draughtsman, Engineer's Office, Docks, Cape Town.

MCLEAN, JOHN, Chief Mechanical Engineer, Lower Barraca, Valetta, Malta.

RUSSELL, ALEXANDER C., Assistant Chief Draughtsman, 655 Hawthorn Street, Springburn, Glasgow.

AS ASSOCIATE MEMBERS.

JOHNSTONE, JOHN GAVIN, B.Sc., Naval Architect, Condorrat Manse, Croy Station.

URE, SEBASTIAN G. M., Engineer, 514 St Vincent Street, Glasgow.

UTTING, SAMUEL, Engineer, 29 Keir Street, Pollokshields, Glasgow.

From Students.

KNOX, ALEXANDER, Assistant Superintendent Engineer, 44 Garden Reach, Calcutta.

MILLAR, JOHN SIMPSON, Chief Draughtsman, 22 Rothesay Gardens, Partick.

MITCHELL, ROBERT MONTEITH, Engineer, 24 Howard Street, Bridgeton, Glasgow.

MORGAN, ANDREW, Engineer, 20 Minerva Street, Glasgow.

STIRLING, ANDREW, Engineering Draughtsman, 3 Greenvale Terrace, Dumbarton.

AS STUDENTS.

CLOVER, MAT, Apprentice Ship Draughtsman, 537 Sauchiehall Street, Glasgow.

HODGART, MATTHEW, Apprentice Engineer, Linnsburn, Paisley.

JOHNSTON, HECTOR, Apprentice Engineer, 206 Lucania Place, South Govan.

KINROSS, CECIL GIBSON, Apprentice Engineer, 4 Park Terrace, Govan.

MCKEAN, JAMES, Apprentice Engineering Draughtsman, 3 Buchanan Terrace, Paisley.

THE FOURTH GENERAL MEETING was held in the Hall of the Institution, 207 Bath Street, Glasgow, on Tuesday, 26th January, 1904, at 8 p.m.

Mr JAMES GILCHRIST, Vice-President, occupied the chair.

The Minutes of the Third General Meeting, held on 22nd December, 1903, having been printed in the billet calling the Meeting, were held as read, and signed by the Chairman.

The Chairman introduced Dr. JOHN MACINTYRE, F.R.S.E., who, on the invitation of the Council, had consented to lecture on "Radium and its Properties."

Thereafter Dr. MACINTYRE delivered his lecture, and on the the motion of the Chairman was awarded a vote of thanks.

The following candidates were duly elected:—

AS MEMBERS.

BOOTH, ROBERT, Engineer, Glengelder, Cowey Road, Durban, Natal.

CLARK, WILLIAM, Engineer, 23 Royal Exchange Square, Glasgow.

GRAY, WILLIAM, Naval Architect, 6 Lloyd's Avenue, London, E.C.

MONROE, ROBERT, Engineer, Eastbrook House, Dinas Powis, Glam.

MORTON, THOMAS M. G., Engineer, Errol Works, Errol, Perthshire.

RICHARDSON, ANDREW, Engineer, Soho Engine Works, Paisley.

From Students.

STARK, JAMES, Civil Engineer, Penang, Straits Settlement.

AS ASSOCIATE MEMBERS.

BURNS, WILLIAM, Ship Draughtsman, 10 Queen Square, Glasgow.

TOSTEE, EVENOR, Engineer, 3A Harvie Street, Paisley Road W., Glasgow.

From Students.

ROSS, JOHN RICHMOND, Engineer, Messrs Balfour, Lyon & Co., Valparaiso.

SYMINGTON, JAMES R., Civil Engineer, Messrs Butterfield & Swire, Hong, Kong.

AS STUDENTS.

BAIRD, JAMES, Mechanical Draughtsman, 30 St. Andrew's Drive, Pollokshields, Glasgow.

FRASER, JOHN ALEXANDER, Apprentice Engineer, 969 Govan Road, Govan.

THE FIFTH GENERAL MEETING of the Institution was held in the Hall of the Institution, 207 Bath Street, Glasgow, on Tuesday, 23rd February, 1904, at 8 p.m.

Mr E. HALL-BROWN, Vice-President, occupied the chair.

The Minutes of the Fourth General Meeting, held on 26th January, 1904, having been printed in the billet calling the Meeting, were held as read, and signed by the Chairman.

The new Members elected at the two previous meetings were duly admitted.

Thereafter the discussion on Mr F. J. ROWAN'S paper was resumed and concluded.

On the motion of the Chairman, Mr ROWAN was awarded a vote of thanks for his paper.

The Chairman moved a vote of thanks to Mr RANKIN KENNEDY for his paper on "Marine Propellers with Non-Reversible Engines and Internal Combustion Engines."

The discussion on Mr J. MILLEN ADAM'S paper, on "An Inquiry regarding the Marine Propeller," was begun and adjourned.

A paper by Mr CHARLES DAY, on "Experiments with Rapid Cutting Steel Tools," was read.

The following candidates were duly elected:—

AS MEMBERS.

GILL, WILLIAM NELSON, Engineer, 11 Kersland Street, Hillhead, Glasgow.
McCALLUM, DAVID BROADFOOT, Engineer, Aldersyde, Radyr, near Cardiff.
REID, WILLIAM PATON, Locomotive Engineer, 35 Dunearn Street, Glasgow, W.
STEWART, JAMES, Engineer, Dunolly, Holmfauldhead Drive, South Govan.

From Students.

JACKSON, WILLIAM STENHOUSE, Naval Architect, 109 Hope Street, Glasgow.
ROBERTSON, ALEXANDER, Engineer and Shipbuilder, 8 Darnley Road, Pollokshields, Glasgow.
SCOBIE, ALEXANDER, Consulting Engineer, 58 West Regent Street, Glasgow.

AS ASSOCIATE MEMBERS.

LOWE, JAMES, Engineer, 33 Nithsdale Road, Glasgow.
LYONS, LEWIS JAMES, Naval Architect, 4 St. James Terrace, Hillhead, Glasgow.

From Students.

FINDLATER, JAMES, Engineer, 124 Pollok Street, Glasgow, S.S.
LAMB, STUART D. R., Civil Engineer, St. Enoch Station, Glasgow.
MUIR, ANDREW A., Engineer, 189 Renfrew Street, Glasgow.
RALSTON, SHIRLEY BROOKS, Ship Draughtsman, 34 Gray Street, Glasgow.

AS AN ASSOCIATE.

CLARK, ROBERT, Shipowner, 21 Bothwell Street, Glasgow.

THE SIXTH GENERAL MEETING of the Institution was held in the Hall of the Institution, 207 Bath Street, Glasgow, on Tuesday, 22nd March, 1904, at 8 p.m.

Professor J. H. BILES, LL.D., Vice-President, occupied the chair.

The Minutes of the Fifth General Meeting, held on 23rd February, 1904, having been printed in the billet calling the Meeting, were held as read, and signed by the Chairman.

The Secretary read a letter from the American Society of Civil Engineers, as follows:—

Office of the Secretary,
220 West 57th Street, New York,
February 10th, 1904.

To the President and Secretary,

INSTITUTION OF ENGINEERS AND SHIPBUILDERS IN SCOTLAND,

207 Bath Street, Glasgow, Scotland.

DEAR SIRS,

I am directed by the Committee in charge to extend a cordial invitation to the Members of the Institution of Engineers and Shipbuilders in Scotland, to participate in an International Engineering Congress to be held, under the auspices of the American Society of Civil Engineers, at the Universal Exposition at St. Louis, Missouri, U.S.A., October 3rd to 8th, 1904, the plan and scope of which are set forth in some detail in the enclosed circular of "Preliminary Announcement."

The Committee hopes that the Members of your organisation will, quite generally, become members of the Congress, and participate in its proceedings, either in person, or by written communications, forwarded to the undersigned, on any of the subjects which have been chosen for consideration.

Yours respectfully,

CHAS. WARREN HUNT,
Secretary.

The Secretary read a petition in favour of the adoption of the Metric Weights and Measures from the Secretary of the Decimal Association, Oxford Court, Cannon Street, London, E.C.

The new Members elected at the previous meeting were duly admitted.

The following Nominations for Office-Bearers (Sessions 1904-07 were then made :—

President, Mr ARCHIBALD DENNY. *Vice-Presidents*, Messrs W. A. CHAMEN, GEORGE MCFARLANE, F. J. ROWAN, and JOHN WARD. *Members of Council from Class of Members*, Messrs ANDREW FISHER, JAMES GILCHRIST, D. C. HAMILTON, J. D. HARRISON, J. FOSTER

KING, FRED. LOBNITZ, DAVID MARSHALL, D. A. MATHESON, ANDERSON RODGER, and JAMES WEIR. *Members of Council from Associate Class*, Messrs W. A. KINGHORN and THOMAS WHIMSTER.

The discussion on Mr J. MILLEN ADAM'S paper on "An Inquiry regarding the Marine Propeller," was resumed and concluded.

On the motion of the Chairman, Mr ADAM was awarded a vote of thanks for his paper.

The discussion on Mr CHARLES DAY'S paper on "Experiments with Rapid Cutting Steel Tools," was resumed and concluded.

On the motion of the Chairman, Mr DAY was awarded a vote of thanks for his paper.

A paper by Professor MAGNUS MACLEAN, M.A., D.Sc., on "The Hewett Mercury Vapour Lamp," was read.

On the motion of the Chairman, Professor MACLEAN was awarded a vote of thanks for his paper.

Thereafter a paper by Mr JOHN G. JOHNSTONE, B.Sc., on "The Uses of the Integraph in Ship Calculations" was held as read.

The following Candidates were duly elected:—

AS MEMBERS.

ALLO, OSCAR EDWARD, Electrical Engineer, 100 Bothwell Street, Glasgow.

COUSINS, JOHN BOOTH, Engineer, 75 Buchanan Street, Glasgow.

HAMILTON, ROBERT SMITH, Engineer, Flemington, Maxwell Park Gardens, Pollokshields, Glasgow.

KERR, JOHN, Engineer, 10 Wellmeadow, Blairgowrie.

YARDLEY, ROBERT WILLIAM, Engineer, Lochinvar, Victoria Drive, Scotstounhill, Glasgow.

From Students.

WANNOP, CHARLES H., Chief Draughtsman, Messrs A. Stephen & Son, Linthouse, Glasgow.

AS ASSOCIATE MEMBERS.

BOYD, JAMES, Engineer, 20 Albert Drive, Crosshill, Glasgow.

JOHNSON, HERBERT AUGUST, Mechanical Engineer, 41 James Street, Holderness Road, Hull.

WILSON, CHARLES A., Mechanical Engineer, 36 Bank Street, Hillhead, Glasgow.

From Students.

SPERRY, [AUSTIN, Naval Architect, 2353 Larkin Street, San Francisco, Cal., U.S.A.

AS ASSOCIATES.

BOWMAN, FREDERICK GEORGE, Machinery Merchant, 21 Kersland Terrace, Hillhead, Glasgow.

GRAHAM, The Most Honourable The Marquis of, Buchanan Castle, Glasgow.

HENDERSON, JOHN, Assistant Secretary, Messrs John Brown & Co., Ltd., Clydebank.

INVERCLYDE, The Right Honourable Lord, Castle Wemyss, Wemyss Bay.

MACBRAYNE, DAVID HOPE, Shipowner, 119 Hope Street, Glasgow.

As Students.

BELL, H. L. RONALD, Apprentice Engineer, Redargan, Drumoyne Drive, Govan.

CRICHTON, JAMES, B.Sc., Apprentice Engineer, c/o Granger, 24 St. Vincent Crescent, Glasgow.

DICKIE, DAVID WALKER, Student of Naval Architecture, 60 Sardinia Terrace, Hillhead.

DORNAN, JOHN D., Apprentice Engineer, 21 Minerva Street, Glasgow.

HALLEY, MATTHEW WHITE, Student of Naval Architecture, 43 Lawrence Street, Partick, Glasgow.

HENDERSON, JOHN ALEXANDER, Student of Naval Architecture, 18 Rothesay Gardens, Partick, Glasgow.

HOYT, CHARLES S., B.A., Student of Naval Architecture, 6 Parkgrove Terrace, Glasgow.

McCLELLAND, HAROLD ROBINSON, Apprentice Engineer, 8 Park Terrace, Govan.

McDONALD, CLAUDE KNOX, Student of Naval Architecture, Lennoxvale Maryland Drive, Craigton, Glasgow.

PARR, FREDRIK, Student of Naval Architecture, 16 Eton Place, Hillhead, Glasgow.

WILLIAMSON, GEORGE TAYLOR, Student of Naval Architecture, Craigbarnet, Greenock.

WORK, JOHN C., Student of Naval Architecture, 6 Parkgrove Terrace, Glasgow.

THE ANNUAL GENERAL MEETING of the Institution was held in the Hall of the Institution, 207 Bath Street, Glasgow, on Tuesday 26th April, 1904, at 8 p.m.

Mr JAMES GILCHRIST, Vice-President, occupied the chair.

The minutes of the Sixth General Meeting, held on 22nd

March, 1904, having been printed in the billet calling the Meeting, were held as read, and signed by the Chairman.

Messrs ANGUS MURRAY and WILLIAM MCWHIRTER were appointed to act as Scrutineers on the ballot for the appointment of Office-Bearers; and Messrs JAMES COATS, SINCLAIR COUPER, ALEXANDER KAY, JAMES LANG, JAMES RICHMOND, and JOHN RIEKIE were appointed assistant Scrutineers.

The new members elected at the previous meeting were duly admitted.

Thereafter the question of signing a Petition in favour of the adoption of the Metric Weights and Measures by this country was considered. A motion that the Petition read at the previous Meeting be signed, and an amendment that the words, "a Decimal System of," be substituted for the words, "the Metric," were put to the Meeting, and on a show of hands the motion was carried. A motion that the Petition be not signed was put before the house and lost. The Petition, as follows, was then signed in presence of the Meeting :—

HOUSE OF LORDS, Session 1904.

TO the Right Honourable the Lords Spiritual and Temporal in Parliament assembled.

THE PETITION of the Institution of Engineers and Shipbuilders in Scotland.

Humbly Sheweth :—

THAT in the opinion of your Petitioners the adoption of the Metric Weights and Measures by this Country is highly necessary :—

(1st.) BECAUSE it has already been adopted by nearly all the civilised Countries.

(2nd.) BECAUSE it would materially assist Education by facilitating the teaching of Arithmetic, and setting free a considerable amount of time which could be devoted to more useful subjects than the learning and practising of our complicated and confused Tables of Weights and Measures.

(3rd.) BECAUSE, as our Consuls frequently reiterate, we lose Trade in consequence of our Weights and Measures not being understood in other Countries, and because the adoption of the Metric Weights and Measures would obviate the present necessity for manufacturing on one basis for export trade and on another for home trade.

(4th.) BECAUSE the Colonies desire the change, but feel that the lead must, on account of inter-colonial trade, be taken by the Mother Country.

(5th.) BECAUSE it would lead to the abolition of a large number of anomalous, customary, or local, but illegal, Weights and Measures, still largely used in various parts of the Country. These irregular Weights and Measures are chiefly objectionable because they give facilities to dishonest traders to take advantage of purchasers who are not acquainted with them.

THAT numerous demonstrations of the desire for the change have been made by resolutions and petitions of Public Bodies, Institutions, Chambers of Commerce, Trades Unions, Retail Trade Organisations, Manufacturers, Engineers, and Teachers.

THAT a Select Committee of the House of Commons in 1895 reported in favour of the compulsory adoption of the Metric Weights and Measures within two years.

THAT your Petitioners are much disappointed that, although eight years have elapsed since then, no steps have been taken to give effect to this recommendation of the Committee.

THAT by reason of the fierce competition for foreign trade, the need for the change is even more serious now than in 1895.

THAT there are indications that the Metric Weights and Measures will before long be adopted by the United States, one of the main arguments, likely to influence that result, being the facility it would give for successful competition with this country in trading with countries using the Metric System, especially in the Republics of South America.

THAT the Colonial Premiers at the Coronation Conference resolved:—

> "That it is advisable to adopt the Metric Weights and "Measures for use within the Empire and the Prime "Ministers urge the Governments represented at this "Conference to give consideration to its early adoption."

Your Petitioners therefore Pray:—

That a Bill may be passed for the compulsory adoption of Metric Weights and Measures, as recommended by the Select Committee of the House of Commons of 1895.

And your Petitioners will ever Pray.

Signed on behalf of the Members of the Institution of Engineers and Shipbuilders in Scotland.

JAMES GILCHRIST, *Chairman.*
EDWARD H. PARKER, *Secretary.*

The discussion on Mr JOHN G. JOHNSTONE'S paper, on "The Uses of the Integraph in Ship Calculations," was begun and concluded.

On the motion of the Chairman, Mr JOHNSTONE was awarded a vote of thanks for his paper.

The following papers were read:—On "Some Modern Appliances Connected with Railway Crossings and Points," by Mr OWEN R. WILLIAMS, B.Sc.; and on "Motor Cars," by Mr ALEXANDER GOVAN.

The Scrutineers submitted their report, and the Chairman announced that the following gentlemen had been duly elected:—*President*—Mr ARCHIBALD DENNY; *Vice-Presidents*—Mr W. A. CHAMEN and Mr JOHN WARD; *Members of Council from Class of Members*—Mr JAMES GILCHRIST, Mr D. C. HAMILTON, Mr FRED. LOBNITZ, Mr D. A. MATHESON, and Mr JAMES WEIR; *Member of Council from Class of Associates*—Mr W. A. KINGHORN.

The following candidates were duly elected:—

AS MEMBERS.

ARNOT, WILLIAM, Engineer, 21 Havelock Street, Partick, Glasgow.

CONSTANTINE, EZEKIEL GRAYSON, Engineer, 53 Deansgate Arcade, Manchester.

AS AN ASSOCIATE MEMBER.

GILCHRIST, JAMES, B.Sc., Civil Engineer, Caledonian Railway Company, Buchanan Street, Glasgow.

AS STUDENTS.

CHISHOLM, JAMES ALBERT, Engineer, Draughtsman, 68 St. George's Road, Glasgow.

GARDNER, HAROLD THORNBY, Apprentice Civil Engineer, Thorncliffe, Skelmorlie.

GRAHAM, JOHN, Ship Draughtsman, 16 Summerfield Cottages, Whiteinch.

KIRBY, WILLIAM HUBERT TATE Apprentice Engineer, 35 Duncan Avenue, Scotstoun, Glasgow.

SELLERS, FREDERICK WREFORD BRAGGE, Draughtsman, 34 Sardinia Terrace, Hillhead, Glasgow.

SEMPLE, JOHN SCOTT, Draughtsman, Coral Bank, Bertro-Hill Road, Shettleston.

TAYLOR, JOHN DOUGLAS, Draughtsman, Jeaniesiea, Oxhill Road, Dumbarton.

AN EXTRAORDINARY GENERAL MEETING was held in the Hall of of the Institution, 207 Bath Street, Glasgow, on Tuesday, 3rd May, 1904, at 8 p.m.

MR E. HALL-BROWN, Vice-President, occupied the Chair. The Minutes of the Annual General Meeting held on Tuesday, 26th April, 1904, having been printed in the billet calling the Meeting, was held as read, and signed by the Chairman.

The new Members elected at the previous Meeting were duly elected.

The following awards were made for papers read during the Session 1902-03:—

(1) A Premium of Books to Mr KONRAD ANDERSSON for his

paper on Steam Turbines: With special reference to the de Laval Type of Turbine."

(2) A Premium of Books to Dr J. BRUHN for his paper on "Some points in connection with the Riveted Attachments in Ships."

Mr W. J. LUKE then exhibited two Integraphs and explained their properties.

Thereafter the discussion on the paper by Mr Owen R. Williams, B.Sc., on "Some Modern Appliances Connected with Railway Crossings and Points," was begun and concluded.

On the Motion of the Chairman, Mr WILLIAMS was awarded a vote of thanks for his paper.

The discussion on Mr ALEXANDER GOVAN'S paper on "Motor Cars" was then proceeded with and concluded.

On the Motion of the Chairman, Mr GOVAN was awarded a vote of thanks for his paper.

The following Candidates were duly elected:—

AS A LIFE MEMBER.

MACLEAN, ANDREW, Shipbuilder, Messrs Barclay, Curle & Co., Whiteinch.

AS MEMBERS.

HILLHOUSE, PERCY ARCHIBALD, B.Sc., Naval Architect, Whitworth, Busby.

KENNEDY, RANKIN, Consulting Engineer, 20 Oakwood Drive, Roundhay, Leeds.

ROSE, JOSEPH, Consulting Engineer, "Westoe," Scotstounhill, Glasgow.

From Students.

CUNNINGHAM, PETER NISBET, Jun., Draughtsman, Easter Kennyhill House, Cumbernauld Road, Glasgow.

HENDERSON, HARRY ESDON, Chief Draughtsman, 32 Curzon Road, Waterloo, near Liverpool.

LORIMER, HENRY DUBS, Steel Manufacturer, Kirklinton, Langside, Glasgow.

NEILL, HUGH, Engineer Surveyor, 99 Clarence Drive, Hyndland, Glasgow.

RODGER, ANDERSON, Jun., Ship Draughtsman, Glenpark, Port-Glasgow.

STEVEN, JOHN A., Engineer, 12 Royal Crescent, Glasgow.

AS AN ASSOCIATE MEMBER.

COLEMAN, HENRY CHARLES, Assistant Superintendent Engineer, Isaac Peral 25, Cadiz, Spain.

From Students.

BLAIR, ARCHIBALD, Engineer, 25 Peel Street, Partick, Glasgow.

BUTLER, JAMES S., 21 Hamilton Terrace, W., Partick, Glasgow.

FERGUS, ALEXANDER, 7 Ibrox Place, Ibrox, Glasgow.

MCCULLOCH, JOHN, Engineering Draughtsman, 49 Arlington Street, Glasgow.

MORRISON, A., Draughtsman, Alt-Na-Craig, Greenock.

As Students.

JENKINS, GARNET EDWARD, Student of Engineering, N.B.R. Station, Springburn, Glasgow.

SIMPSON, ADAM, Engineering Draughtsman, 12 Rupert Street, Glasgow, W.

REPORT OF THE COUNCIL.

Session 1902-1903.

On the occasion of the Opening Meeting of the Forty-Seventh Session, the Council has pleasure in presenting to the Members the following report of the progress and work of the Institution during the past twelve months.

The changes which have taken place in the Roll are shown in the following statement:—

Session 1901-1902.		Session 1902-1903.	
Honorary Members,	8	... ...	9
Members, ...	961	... ...	962
Associate Members,	—	... ...	46
Associates, ...	90	... ...	81
Graduates, ...	338	... ...	—
Students, ...	—	... ...	287
	1397		1385

His Majesty the King conferred the honour of Knighthood upon Mr John Shearer, a Member of the Institution.

The Council records with regret the deaths of the following gentlemen:— Members—William Aitchison, Glasgow; Thomas Arthur Arrol, Glasgow; Thomas Davison, Glasgow; John Dempster, Glasgow; Charles R. Dübs, Glasgow; William Foulis, Glasgow; James M. Gale, Glasgow; William Hastie, Greenock; John Hodgart, Paisley; Matthew Holmes, Lenzie; Guybon Hutson, Glasgow; Robert M'Master, Glasgow; James Neilson, C.B., Mossend; Andrew Paul, Dumbarton; Thomas B. Seath, Rutherglen; William Simons, Tighnabruaich; James M. Thomson, Glasgow; John Turnbull, Jun., Glasgow; and James Cowan Woodburn, Glasgow. Associates—John Bryce, Dunoon; James Ritchie, Glas-

gow ; and Hugh Wallace, Glasgow. Graduate—Andrew M'Vitae, Glasgow.

The Meetings held during the Session were nine in number, at which the following papers were read and discussed :—

"Steam Turbines: with Special Reference to the de Laval Type of Turbine," by Mr Konrad Andersson.

"Some Points in connection with the Riveted Attachments in Ships," by Mr J. Bruhn, D.Sc.

"Circulation in Shell Boilers," by Mr William Thomson.

"The Dynamic Balance of the Connecting-Rod," by Mr C. A. Matthey.

"Notes Relating to the de Laval Steam Turbine, the Wire-drawing Calorimeter, and the Superheating of Steam by Wiredrawing," by Professor W. H. Watkinson.

"Speed Control by Electric Motors when Driven from Constant-Pressure Mains," by Mr W. B. Sayers.

"Tools and Gauges in the Modern Shop," by Mr H. F. L. Orcutt.

"Experimental and Analytical Results of a Series of Tests with a Pelton Wheel," by Mr Wm. Campbell Houston, B.Sc.

"The Old Quay Walls of Glasgow Harbour, ' by Mr W. M. Alston.

The Meetings held by the Students were five in number. The Session was opened by an address from Mr A. J. Kay, President of the Section, and at the subsequent meetings the undermentioned papers were read and discussed :—

"Some Points in Corliss Gears," by Mr G. E. Windeler.

"Steam-Ship Pipe Arrangements," by Mr A. Dunlop.

"The Balancing of Engines," by Mr T. C. Jones.

The Silver Medal for the best paper read in this Section was awarded to Mr T. C. Jones.

Board of Trade Consultative Committee.

The Institution was represented on this Committee by Mr James Denny, Mr John Duncan, Mr James Hamilton, and Mr James Weir.

The Committee met in London in the months of February, April, and July, and dealt with various matters put before it by its Constituents; many of these were discussed with the Board of Trade. Among the subjects submitted to the Board of Trade by the Committee, and now under consideration of the Board, and your Committee, are the following:—

Use of high tensile steel.
Uniformity of rules for shells of boilers.
Boiler fittings.
Testing of materials.
Use of corticine in lieu of thin planking for decks.
Measurement of engine-room spaces.
Verbal approval of boiler designs.
Several other points relating to measurement of tonnage.

It will be remembered that the Board of Trade have agreed to the Committee's request "That the incomplete declaration of the surveyor at the port of building, so far as it goes, shall not be called in question by a surveyor at another port to which the vessel may be transferred before the certificate is completed, except in respect to any defect showing up in the passage."

Lloyd's Technical Committee.

The Institution was represented on the Technical Committee of Lloyd's Register of Shipping by Mr Sinclair Couper, Mr John Inglis, LL.D., Mr Richard Ramage, and Mr James Rowan.

The usual meetings of the Committee were held in London during the months of November, 1902, and March, 1903, and the Institution's representatives took part in the discussion and settlement of the various matters in connection with the following subjects:—

1. Alterations of rules as regards face angles to web frames and side stringers.
2. ,, ,, ,, diamond plate attachments of do.
3. ,, ,, ,, riveting of plate edges in large steamers.
4. ,, ,, ,, double bottom scantlings.
5. ,, ,, and tables for rivets and riveting.
6. New rules for burning and carrying of liquid fuel.
7. Tube plates of combustion chambers.
8. Complete new rules and tables for wood, composite, and steel yachts.
9. Discussion of proposal for testing rivets and rivet material on makers' premises.
10. Discussion of proposal for requiring steering and derrick chains to be tested at a proving house.
11. Discussion of proposal for testing all smiths' iron for classed vessels.

Board of Governors of The Glasgow School of Art.

The Institution was represented on the Board of Governors of the Glasgow School of Art by Mr James Mollison, who reports that—

The Glasgow School of Art continues to progress apace. The number of students who attended during the Session 1902-3 was 1,336, an increase of 338 on the previous session.

The benefits of this School as the central institution for higher education in art for Glasgow and the surrounding districts, are being largely taken advantage of, and numerous day school teachers from the counties of Lanark, Renfrew, Dumbarton, Argyle, Stirling, and Ayr have been receiving instruction.

A graduated course of instruction has been mutually agreed upon between the Governors and School Board, and approved by the Scotch Education Department, whereby students commencing in the day schools, and passing through the Evening Continuation Classes, can enter the School of Art for higher instruction. Special attention is given to the teaching of applied design and the training of art craftsmen. The importance of this matter

cannot be too highly estimated, considering the foreign competition this country has now to face. Over 600 craftsmen, representative of the various mechanical and manufacturing industries throughout the district, received instruction during the session.

The Governors are authorised by the Scotch Education Department to grant certificates and diplomas for higher work. Special prizes are also given by the Glasgow Institution of Architects and other Glasgow societies.

Board of Governors of The Glasgow and West of Scotland Technical College.

The Institution was represented on the Board of Governors of the Glasgow and West of Scotland Technical College by Mr James Weir, who reports that—

No new feature of outstanding interest was introduced into the programme of studies during the past year, as the Governors felt that any important development should be deferred until they were in possession of the new buildings now in course of erection. The building operations have been carried on as rapidly as was expected, and the first section is now considerably above foundation level. It is estimated that the total expenditure, exclusive of equipment, will be not less than £210,000, and, of this sum, promises of donations and grants amounting to £182,382 have been received.

Reference should be made to the visit of King Edward and Queen Alexandra, which took place on 14th May last, on which occasion the memorial stone of the new building was laid by His Majesty. Invitations to the ceremony were issued to all subscribers to the building fund, and to representatives of public bodies, including the Council and officers of the Institution.

The students of last session were as follows :—Day students, 652; evening students, 4,424; pupils of Allan Glen's School, 602 —a total of 5,678. Of this number, 1,283 of the evening students were employed in engineering or shipbuilding works. Of the

day students, the large majority were those who intended to make engineering their profession, and practically the whole of those taking the full course of instruction in mechanical and electrical engineering are studying under the so-called "sandwich" system, the summer months being spent in the workshops and the winter given to College classes.

The Governors have been gratified to note the increasing interest in this system taken by many of the large employers in the neighbourhood. Several firms have sent selected apprentices to the College, and are recognizing the time spent in College as part of the period of apprenticeship. In some cases the wages of the apprentices are being paid during their attendance at College, subject, of course, to satisfactory reports upon their progress and work.

During last session a special committee for the superintendence of the Chemical and Metallurgical Departments of the College was established, and certain representative manufacturers in the different branches of the chemical industry joined the committee on the invitation of the Governors. A proposal to establish a similar committee for the engineering side of the College is now under consideration, and it is expected that, during the ensuing session, this committee will be fully constituted. These committees, which will have full executive powers, subject to the general control of the Governors, are intended to bring the College into the closest possible contact with the employers, and to provide a channel through which the employers may make known their views regarding the manner in which the College can best aid the industries concerned.

The Council desires to express the thanks of the Institution to these gentlemen for their services on these bodies.

The "James Watt' Dinner was held in the Windsor Hotel, Glasgow, on Saturday evening, 18th January, 1903, and was well attended by members and their friends.

The surplus revenue for the Session ending 30th September, 1903, as shown by the Treasurer's Statement appended hereto, is £133 11s 6d.

TREASURER'S
INCOME AND EXPENDITURE ACCOUNT
GENERAL

ORDINARY INCOME.		1902-1903.	1901-1902.
I. *Annual Subscriptions received*—			
Members, ...	£1621 10 0		
Associate Members, ...	14 0 0		
Associates, ...	112 10 0		
Graduates, ...	140 10 0		
		£1888 10 0	*£1528 10 0*
II. *Arrears of Subscriptions recovered, less expenses,*		42 1 1	*36 1 6*
III. *Sales of Transactions,*		11 14 3	*30 11 0*
IV. *Interests and Rents*—			
Interest on Clyde Trust Mortgages for £400, less tax, ...	£13 2 11		*11 8 10*
Students' Institution C.E., for use of Library, ...	11 18 0		*11 16 0*
Interest on Deposit Receipts, *less* Income Tax, ...	6 3 1		*5 2 5*
Interest on Glasgow Corporation Loan, ...	7 9 0		. . .
		38 13 0	[*22 7 3*]
		£1980 18 4	*£1623 9 9*

STATEMENT.
FOR YEAR ENDING 30TH SEPTEMBER, 1903.
FUND.

ORDINARY EXPENDITURE.			1902-1903.			1901-1902.		
I. *General Expenses*—								
Secretary's Salary, ...	£400	0 0				£300	0	0
Clerk's Salary, ...	60	0 0				56	18	0
Institution's proportion of net cost of maintenance of Buildings, etc.	213	7 3				108	8	5
Interest on Medal Funds, ...	.	. .				6	17	3
Library Books, ...	29	2 1				32	16	10
Binding Periodicals and Papers,	11	19 10				28	17	2
Stationery and Postages, etc.,	54	5 0				48	13	11
Office Expenses, ...	32	1 0				34	8	10
Advertising, Insurance, etc., ...	2	12 6				6	5	6
Travelling Expenses, ...	5	9 2				.	.	.
			£808	16 10		[623	5	11]
II. "*Transactions*" *Expenses*—								
Printing and Binding,	£429	4 3				394	4	6
Lithography, ...	169	5 3				185	3	9
Postages, ...	74	4 1				74	16	7
Reporting, ...	23	10 0				15	5	6
Delivery of Annual Volume, ...	15	10 0				14	14	5
			711	13 7		[684	2	9]
III. *Awards*—Premiums for Papers, ...			15	1 7		5	2	6
EXTRAORDINARY EXPENDITURE.								
Honorarium to Secretary, ...	£100	0 0						
Library Catalogue, ...	117	15 10						
Articles of Association, ...	89	7 6						
Sundries, ...	4	11 6						
			311	14 10		70	8	9
Surplus carried to Balance Sheet, ...			133	11 6		240	9	10
			£1980	18 4		£1623	9	9

BALANCE SHEET, AS AT

LIABILITIES.			As at 30th Sept., 1903.	*As at 30th Sept., 1902.*
I. *General Capital Account*—				
As at 1st Oct., 1902, ...	£4583 8 3			
Entry money, ...	50 0 0			
Surplus from Revenue, ...	133 11 6			
			4766 19 9	*£4583 8 3*
II. *Life Members' Subscriptions,*			50 0 0	*(included in No. I.)*
III. *Sundry Creditors,*			27 1 6	*0 10 0*
IV. *Subscriptions paid in advance,*			56 10 0	*£32 10 0*
V. *Medal Funds*—				
Marine Engineering—				
Balance as at 1st Oct., 1902,	£551 10 2			
Interest received during year,	17 12 10			
		£569 3 0		*551 10 2*
Railway Engineering—				
Balance as at 1st Oct., 1902,	£344 16 9			
Interest received during year,	10 19 4			
		355 16 1		*344 16 9*
Graduates'—				
Balance as at 1st Oct., 1902.	£23 13 9			
Cost of medal, £1 7s 6d; *less* interest received during year, 15s 7d,	0 11 11			
		23 1 10		*23 13 9*
			948 0 11	*[920 0 8]*
			£5848 12 2	*£5536 3 11*

30TH SEPTEMBER, 1903.

ASSETS.				As at 30th Sept., 1903.	As at 30th Sept. 1902.
I. *Heritable Property*—					
Total Cost, £7094 16 3					
Of which one-half belongs to the Institution, ...				£3547 8 1	£3547 8 1
II. *Furniture and Fittings*—					
Valued at, say				65 10 0	65 10 0
III. *Books in Library*—					
Valued at, say				500 0 0	500 0 0
IV. *Investments*—					
Clyde Trust Mortgage, ...		400	0 0		
Glasgow Corporation,... ...		200	0 0		
				600 0 0	400 0 0
V. *Medal Funds Investments*—					
Clyde Trust Mortgage,		£903	0 0		
On Deposit Receipt and Interest,		17	7 8		
				920 7 8	903 0 0
VI. *Arrears of Subscriptions*—					
Session 1902-1903—					
Members, ...		£108	0 0		
Associates, ...		4	10 0		
Students,... ...		5	0 0		
		£127	10 0		
Previous sessions—					
Members, £29 10 0					
Associates, 2 0 0					
Students, 8 0 0					
		39	10 0		
Total,		£166	0 0		
Valued at, say ...			...	50 0 0	50 0 0
VII. *Sundry Debtors*—				1 0 0	2 3 2
VIII. *Cash*—					
In Bank, on Deposit Receipt and Interest, ...		£130	19 8		
On Current Account,... ...		13	4 0		
In Secretary's hands, ...		20	2 9		
				164 6 5	68 7 8
				£5848 12 2	£5536 8 11

GLASGOW, *21st October, 1903.*—Audited and certified correct.

DAVID BLACK, C.A., *Auditor.*

ABSTRACT OF "HOUSE EXPENDITURE" ACCOUNT FOR SESSION 1902-1903.

Note.—The Account of the House Committee, of which the above is an abstract, is kept by Mr John Mann, C.A., Treasurer to the Committee, and is periodically audited by the Auditors appointed by the Institution and the Philosophical Society.

EDWARD H. PARKER, *Secretary to the House Committee.*

INCOME.	12 months, to 30th Sep., 1903.	*12 months, to 30th Sep., 1902.*	EXPENDITURE.	12 months, to 30th Sep., 1903.	*12 months, to 30th Sep., 1902.*
Rents for Letting Rooms, ...	£97 8 6	*£126 0 0*	Salary to Curator, ...	£135 0 0	*£135 0 0*
Balance, being excess Expenditure, ...	426 14 6	*216 16 10*	Salary to Attendant at Library, Cleaning, etc., ...	85 3 8	*80 16 4*
Payable by Institution, ... £213 7 3			Feu-duty, Taxes, and Insurance,	57 8 4	*49 4 1*
Payable by Philosophical Society, 213 7 3			Law Expenses, ...	. . .	*13 0 2*
			Alterations, Repairs & Renewals,	198 11 6	*16 0 11*
			Coal, Gas, and Electric Light,	45 6 4	*45 15 0*
			Stationery, Postages, and Incidental Expenses, ...	2 13	*3 0 4*
	£524 3 0	*£342 16 10*		£524 3 0	*£342 16 10*

GLASGOW, *21st October, 1903.*—Audited and certified correct.

DAVID BLACK, C.A., *Auditor.*

REPORT OF THE LIBRARY COMMITTEE.

THE additions to the Library during the year include 53 volumes by purchase; 11 volumes and 1 pamphlet by donation; while 148 volumes were received in exchange for the Transactions of the Institution. Of the periodical publications received in exchange, 26 were weekly, and 24 monthly. Sixty-two volumes were bound during the year.

The new Library Catalogue was completed in April, 1903, and copies may be had, free of cost, on application to the Secretary or Sub-Librarian.

As the proceedings of the most important engineering societies are to be found in the Library of the Institution, the Committee begs to draw the attention of Members to the existence of this particular section.

The Institution possesses a complete set of the Abridgments of Specifications of Patents dating from 1617, which is available for reference purposes in the Library.

Donations to the Library.

Alexander, T. and Thomson, A. W. Elementary Applied Mechanics, 1902. From the Authors.

County of Lanark—Report on the Administration of the Rivers Pollution Prevention Acts. 1903. From the Medical Officer of the County.

Index Key showing Abridgment Classes and Index headings to which Inventions are assigned in the Official Publications of the Patent Office. 1899. From the Patent Office.

Lloyd's Register of Shipping (2 vols.); and 1 volume of Rules and Regulations. 1902-03. The same for 1903-04. From Lloyd's Committee.

Manchester Steam-Users' Association. Memorandum by Chief Engineer, 1902. Pamphlet. From the Association.

Sothern, J. W. Examination Drawing Cards for Marine Engineers. From the Author.

Books added to the Library by Purchase.

Arrhenius, Svante. Text-Book of Electro Chemistry. Translated by John McCrae. 1902.

Atkinson, Philip. Power Transmitted by Electricity and Applied by the Electric Motor. 3rd edition. 1902.

Bolland, Simpson. Encyclopædia of Founding and Dictionary of Foundry Terms used in the Practice of Moulding. New York. 1894.

Bolland, Simpson. The Iron Founder. New York. 1901.

Blount, B. Practical Electro Chemistry. Westminster. 1901.

Brannt, William T. (Editor). Metal Workers' Hand-Book of Receipts and Processes. Philadelphia. 1900.

Brannt, William T. (Editor). Metallic Alloys. New Edition. 1896.

Brassey's Naval Annual, 1903.

Brearley, Harry and Ibbotson Fred. Analysis of Steel-Works Material. 1902.

Christie, William Wallace. Chimney Design and Theory. 2nd Edition. New York. 1902.

Denny, G. A. Deep-Level Mines of the Rand and their Future Development. 4to. 1902.

Donaldson, William. Principles of Construction and Efficiency of Water-Wheels. 1876.

Donkin, Bryan and Kennedy, A. B. W. Experiments on Steam-Boilers. 4to. 1897.

Dron, R. W. Coal Fields of Scotland. 1902.

Dye, Frederick. Lighting by Acetylene. 1902.

Eissler, M. Hydro-Metallurgy of Copper. 1902.

Ganot, Adolphe. Elementary Treatise on Physics. 16th edition. 1902.

Geikie, Sir Archibald. Text-Book of Geology. 3rd Edition. 1893.

Grimshaw, Robert. Modern Workshop Hints. 1902.

Herbert, T. E. Telephone System of the British Post Office: a Practical Handbook. 2nd Edition. 1901.

Hood, Charles and Dye, Frederick. Practical Treatise upon Warming Buildings by Hot Water, and upon Heat and Heating Appliances in General. 3rd Edition. 1897.

Jenkins, Rhys. Motor Cars and the Application of Mechanical Power to Road Vehicles. 1902.

Kap, Gisbert. Dynamos, Motors, Alternators, and Rotary Converters. 3rd Edition: Translated by H. H. Simmons. 1902.

Kinealy, J. H. Elementary Text-Book on Steam Engines and Boilers. 3rd Edition. New York. 1901.

Kirk, Edward. The Cupola Furnace: a Practical Treatise on the Construction and Management of Foundry Cupolas. Philadelphia. 1899.

Larkin, James. The Practical Brass and Iron Founder's Guide. New Edition. Philadelphia. 1892.

Middleton, R. E., Chadwick Osbert, and Bogle, J. du T. Treatise on Surveying. Part II. 1902.

Middleton, R. E. and Chadwick Osbert. Treatise on Surveying. Vol. I. 1899.

Naylor, W. Trades Waste: its Treatment and Utilization. 1902.

Neilson, Robert M. The Steam Turbine. 1902.

Niaudet, Alfred. Elementary Treatise on Electric Batteries. 7th Edition: Translated by L. M. Fishback. New York. 1900.

Parkinson, Richard M. Light Railway Construction. 1902.

Parr, G. D. A. Electrical Engineering Testing. 1902.

Parr, G. D. A. Practical Electrical Testing in Physics and Electrical Engineering. 1901.

Pullen, W. W. F. Steam Engineering; a Treatise on Boilers, Steam, Gas and Oil Engines, and Supplementary Machinery. Manchester. No date.

Rhodes, W. G. Elementary Treatise on Alternating Currents. 1902.

Robinson, W. Gas and Petroleum Engines. 2nd Edition. 1902.

Sadtler, Samuel P. Handbook of Industrial Organic Chemistry. 3rd Edition. Philadelphia. 1900.

Seddon, H. C. Builders Work and the Building Trades. 3rd Edition. 1897.

Sewell, Tyson. Elements of Electrical Engineering. 1902.

Sexton, A. H. Metallurgy of Iron and Steel. Manchester. 1902.

Steinmetz, Charles P. Theory on Calculation of Alternating Current Phenomena. 3rd Edition. New York. 1900.

Thomson, Sir William (Baron Kelvin). Popular Lectures and Addresses. Vol. II.—Geology and General Physics. 1894.

Thompson, S. P. Design of Dynamos. 1903.

Toothed Gearing: a Practical Handbook for Offices and Workshops. By a Foreman Pattern Maker. 1892.

Watt, Alexander. Electro-Plating and Electro-Refining of Metals New edition. 1902.

Webb, Herbert L. Practical Guide to the Testing of Insulated Wires and Cables. New York. 1899,

West, Thomas D. American Foundry Practice. 10th Edition. New York. 1901.

West, Thomas D. West's Moulders' Text-Book: being Part II. of American Foundry Practice. 8th Edition. New York. 1900.

Wharton, Sir William J. L. Hydrographical Surveying. 2nd Edition. 1898

Whitelaw, John. Surveying as Practised by Civil Engineers and Surveyors. 1902.

Wood, Francis. Sanitary Engineering. 1902.

Year-Book of Scientific and Learned Societies. 1902.

The Institution Exchanges Transactions with the following Societies, etc. :—

Aberdeen Association of Civil Engineers, Aberdeen.
American Institute of Electrical Engineers, New York.
American Institute of Mining Engineers, New York.
American Philosophical Society, Philadelphia.
American Society of Civil Engineers, New York.
American Society of Mechanical Engineers, New York.
Association des Ingénieurs des Écoles Spèciales de Gand, Belgium.
Association Technique Maritime, Paris.
Austrian Engineers' and Architects' Society, Wien.
Bristol Naturalists' Society, Bristol.
British Association for the Advancement of Science, London.
British Corporation for the Survey and Registry of Shipping, Glasgow.
Bureau of Steam Engineering, Navy Department, Washington.
Canadian Institute, Toronto.
Canadian Society of Civil Engineers, Montreal.
Edinburgh Architectural Association, Edinburgh.
Engineering Association of New South Wales, Sydney.
Engineering Society of the School of Practical Science, Toronto.
Engineers' and Architects' Society of Naples, Naples.
Franklin Institute, Philadelphia, U.S.A.
Geological Survey of Canada, Ottowa.
Hull and District Institution of Engineers and Naval Architects, Hull.
Institute of Marine Engineers, London.
Institution of Civil Engineers, London.
Institution of Civil Engineers of Ireland, Dublin.
Institution of Electrical Engineers, London.
Institution of Junior Engineers, London.
Institution of Mechanical Engineers, London.
Institution of Naval Architects, London.
Institution of Naval Architects, Japan.
Iron and Steel Institute, London.
Liverpool Engineering Society, Liverpool.

Literary and Philosophical Society of Manchester, Manchester.
Lloyd's Register of British and Foreign Shipping, London.
Magyar Mérnök es Épitesz-Egylet, Budapest.
Manchester Association of Engineers, Manchester.
Midland Institute of Mining, Civil, and Mechanical Engineers, Barnsley.
Mining Institute of Scotland, Hamilton.
North-East Coast Institution of Engineers and Shipbuilders, Newcastle-on-Tyne.
North of England Institute of Mining and Mechanical Engineers, Newcastle-on-Tyne.
Patent Office, London.
Royal Dublin Society, Dublin.
Royal Philosophical Society of Glasgow.
Royal Scottish Society of Arts, Edinburgh.
Sanitary Institute of Great Britain, London.
Schiffbautechnischen Gesellschaft, Berlin.
Scientific Library, U.S. Patent Office, Washington, U.S.A.
Shipmasters' Society, London.
Smithsonian Institution, Washington, U.S.A.
Société d'Encouragement pour l'Industrie Nationale, Paris.
Société des Ingénieurs Civils de France, Paris.
Société des Sciences Physiques et Naturelles de Bordeaux, Bordeaux.
Société Industrielle de Mulhouse, Mulhouse.
Society of Arts, London.
Society of Arts, Massachusetts Institute of Technology, Boston.
Society of Engineers, London.
Society of Naval Architects and Marine Engineers, New York, U.S.A.
South Wales Institute of Engineers, Cardiff.
Technical Society of the Pacific Coast, San Francisco, U.S.A.
West of Scotland Iron and Steel Institute, Glasgow.

Copies of the Transactions are forwarded to the following Colleges, Libraries, etc.:—

Advocates' Library, Edinburgh.

Bodleian Library, Oxford.
British Museum, London.
Cornell University, Ithaca, U.S.A.
Coatbridge Technical School, Coatbridge.
Dumbarton Free Public Library, Dumbarton.
Glasgow and West of Scotland Technical College, Glasgow.
Glasgow University, Glasgow.
Mercantile Marine Service Association, Liverpool
M'Gill University, Montreal.
Mitchell Library, Glasgow.
Polytechnic School of Engineering, Ghizeh, Egypt.
Royal Naval College, Greenwich.
Southampton Public Library, Southampton.
Stevens Institute of Technology, Hoboken, U.S.A.
Stirling's Library, Glasgow.
Trinity College, Dublin.
Underwriters Rooms, Glasgow.
do. Liverpool.
University College, London.
University Library, Cambridge.
Yorkshire College, Leeds.

Publications Received periodically in Exchange for Institution Transactions :—

American Machinist.
American Manufacture and Iron World.
Automobile Club Journal.
Automotor Journal.
Cassier's Magazine.
Cold Storage and Ice Trades Review.
Colliery Guardian.
Contract Journal.
Electric Club Journal.
Electrical Magazine.
Electrical Review.

Engineer.
Engineering.
Engineering Magazine.
Engineering Record.
Engineering Review.
Engineering Times.
Engineers' Gazette.
Indian Engineering.
Iron Age.
Iron and Coal Trades' Review.
Iron and Steel Trades' Journal.
Ironmonger.
Journal de l'École Polytechnic.
L'Industria.
Light Railway and Tramway Journal.
Machinery.
Machinery Market.
Marine Engineer.
Marine Engineering.
Mariner and Engineering Record.
Mechanical Engineer.
Mechanical Review.
Mechanical World.
Nature.
Nautical Gazette.
Page's Magazine.
Petroleum World.
Portefeuille Économique des Machines.
Practical Engineer.
Revue Industrielle.
Science Abstracts.
Scottish Electrician.
Shipping World.
Stahl und Eisen.
Steamship.

Street Railway World.
Technics.
The Engineering Press Monthly Index Review.
The Indian and Eastern Engineer.
Tramway and Railway World.
Transport.

The Library is closed for the Summer Holidays from the 11th July till 31st July inclusive.

Except during holidays and Saturdays, the Library is open each lawful day from 1st May till 30th September inclusive, from 9.30 A.M. till 5 P.M. On Saturdays the Library is open from 9.30 A.M. till 1 P.M.

On the 1st October and thereafter throughout the Winter Session the Library will be open each lawful day from 9.30 A.M. till 8 P.M., except on Meeting Nights of the Institution and Royal Philosophical Society, when it is open till 10 P.M., and on Saturdays, when it is closed at 2 P.M.

Members have the privilege of consulting the Books in the Library of the Royal Philosophical Society.

The use of the Library and Reading Room is open to Members, Associates, Associate Members, and Students.

The Portrait Album lies in the Library for the reception of Members' Portraits. Members are requested when forwarding Portraits to attach their Signatures to the bottom of Carte.

The Library Committee are desirous of calling the attention of Readers to the "Recommendation Book," where entries can be made of titles of books suggested as suitable for addition to the Library.

A List of the Papers read and Authors' Names, from the First to the Thirty-Third Sessions, will be found in Vol. XXXIII. of the Transactions.

As arranged by the Council, a Register Book for Students lies in the Library for the inspection of Members, the object being to assist Students of the Institution in finding suitable appointments.

WILLIAM BROWN,
Hon. Librarian and Convener.

Annual Subscriptions are due at the commencement of each Session: viz.:—

MEMBERS, £2; ASSOCIATE MEMBERS, £1; ASSOCIATES, £1 10s; STUDENTS, 10s; LIFE MEMBERS, £25; LIFE ASSOCIATES, £20.

Membership Application Forms can be had from the Secretary or from the Sub-Librarian, at the Rooms, 207 Bath Street.

The Council, being desirous of rendering the transactions of the Institution as complete as possible, earnestly request the co-operation of Members in the preparing of Papers for reading and discussion at the General Meetings.

Early notice of such papers should be sent to the Secretary, so that the dates of reading may be arranged.

Copies of the reprint of Vol. 7 containing a paper on "The Loch Katrine Water Works," by Mr J. M. Gale, C.E., may be had from the Secretary; price to Members, 7/6.

Members of this Institution, who may be temporarily resident in Edinburgh, will, on application to the Secretary of the Royal Scottish Society of Arts, at his office, 117 George Street, be furnished with billets for attending the meetings of that Society.

The Meetings of the Royal Scottish Society of Arts are held on the 2nd and 4th Mondays of each month, from November till April, with the exception of the 4th Monday of December.

Yours Truly
James M. Gale

OBITUARY

Honorary Mem[illegible]

[illegible] Morris Gale, [illegible]gineer-in-C[illegible]
[illegible] sioners, died [illegible] residence, D[illegible]
[illegible] 1903 [illegible] was a native of [illegible]
[illegible] 1820 [illegible] ished the [illegible]
[illegible] Academy [illegible] to Glasgow [illegible]
[illegible] his elder [illegible] Mr William Gale, [illegible]
[illegible] to the G[illegible] Company. [illegible]
[illegible] Mr Gale [illegible] engineering [illegible]
[illegible] the Glasgow [illegible]
[illegible] and [illegible] in A[illegible]
[illegible] he [illegible] the position of Ass[illegible]
[illegible] and [illegible] continued [illegible]
[illegible] ty-four [illegible]
[illegible] of [illegible] Reservoir, th[illegible]
[illegible] with the [illegible] Water Work [illegible]
[illegible] an enlarg[illegible]
[illegible] as an alt[illegible]
[illegible] was not a[illegible]
[illegible] of Glasgow [illegible]
[illegible] red to it in [illegible]
[illegible] of all the [illegible]
[illegible] we have co[illegible]
[illegible] Corbals Water W[illegible]
[illegible] which comp[illegible]
[illegible] and in [illegible] the [illegible]
[illegible] fully consid[illegible] with the
[illegible] the waters of the [illegible] When, in 1885,
[illegible] obtained an [illegible] of Parliament for the
[illegible] supply of w[illegible] Loch Katrine, Mr

Yours Truly
James M. Gale

OBITUARY.

Honorary Member.

JAMES MORRIS GALE, Engineer-in-Chief to the Glasgow Water Commissioners, died at his residence, Daldrishaig, Aberfoyle, on 7th September, 1903. He was a native of Ayr where he was born in the year 1830. Having finished the first part of his education at the local Academy he came to Glasgow in 1844, and entered the office of his elder brother, Mr William Gale, who was at that time engineer to the Gorbals Water Company. While employed with his brother Mr Gale attended the engineering classes of Professor W. J. Macquorn Rankine, at the Glasgow University, and studied mathematics under Professor Laing in Anderson's College. For eight years he occupied the position of Assistant Engineer to his brother, and during that period gained considerable experience for his future work. At the age of twenty-four he was entrusted with the construction of the Balgray Reservoir, the largest of the reservoirs connected with the Gorbals Water Works. About the same time Mr Gale planned a scheme for an enlargement of the Gorbals water supply, which was considered as an alternative supply to that of Loch Katrine. This scheme was not adopted, but the engineers consulted by the Corporation of Glasgow on the subject, Messrs Stephenson and Brunel, referred to it in the following manner:— "After careful consideration of all the circumstances and an examination of the country, we have come to the conclusion that the extension of the present Gorbals Water Works, as proposed by Mr Gale, is the only plan which complies with the requisite conditions of quality and quantity, and in our opinion it is the only scheme which can be usefully considered in comparison with the proposed appropriation of the waters of the lakes." When, in 1885, the Glasgow Corporation obtained an Act of Parliament for the introduction of a new supply of water from Loch Katrine, Mr

Gale acted as engineer on the city section of the scheme under Mr J. F. La Trobe Bateman by whom the scheme was devised and carried out. On its completion in 1859 Mr Gale was appointed engineer-in-chief, and from that time onwards till the close of 1902, when he retired through failing health, he had entire charge of the works. In 1882 it was found that a fresh supply of water would soon be required, and three years later an Act was obtained giving powers to construct another aqueduct, calculated to carry from Loch Katrine an equal supply of water. Mr Gale's scheme for doubling the supply included the raising of the boundaries of the loch, and a new reservoir at Craigmaddie. The work of construction was commenced in 1886, and completed in ten years. Besides his work for the city of Glasgow he rendered able assistance to the Local Authorities of Dumbarton, Port-Glasgow, Kilmarnock, and Hamilton, in connection with the respective water supplies to those burghs. In 1863 he read a paper before the Institution on the Glasgow Water Works.*

Mr Gale joined the Institution as a Member in 1858; was elected a Member of Council for session 1863-4; became a Vice-president for sessions 1864-6; and filled the office of President for sessions 1867-9. For twenty-three years he served the Institution as Treasurer, and in recognition of his valuable services gratuitously rendered to the Institution, he was elected an Honorary Member in 1902.

Members.

WILLIAM ALLAN was a native of Dundee, where he was born in November, 1837, and when only ten years of age, through his father's adversity, he had to seek a living as best he could in an engineering shop in that city. Of his early career very little is known, but his advance in life, the outcome of many sterling qualities, was extremely rapid. In 1861 he became chief engineer of a blockade runner during the American Civil War. Mr Allan was

* See Vol. vii. p. 21.

made a prisoner of war and was confined in a prison at Washington for six weeks, during which time he suffered, with other prisoners, scandalous privations. On his return to this country he found employment in a boiler works at Carlisle, and thereafter, in the North-Eastern Marine Engine Works, Sunderland, finally becoming manager of the latter establishment. Leaving the North-Eastern Company in 1887, he started the Scotia Engine Works, of which he was managing director up to the time of his death. He was practically speaking a self-taught man, and notwithstanding that he possessed little or no knowledge of mathematics, thermodynamics, or the laws of heat, yet he was in the front rank as a manufacturer of marine engines and boilers.

His importance in the public eye is shown by his nomination to a Justiceship of the Peace, and a Deputy Lieutenancy of the County of Durham, and his election as Member of Parliament for Gateshead in 1893 was a remarkable testimony to his popularity. He described himself as an "advanced radical," but although possessing advanced political views, it did not prevent him from attaining a prominent position in the ranks of the Commons, where he was one of the figures that attracted considerable attention. His outspokenness on Naval matters was alike a source of delight to Members of the House and strangers. He was a persistent advocate of the use of the Scottish boiler as against boilers of the water-tube type of whatever kind, and it was principally due to his criticisms that the appointment of the Boiler Commission was due. Mr Allan was Treasurer of the Byron Society, and as a recreation wrote songs and poems. His "Book of Poems," a copy of which he presented to the Library of the Institution, had a considerable sale.

In 1902 Mr Allan was knighted, and he thoroughly deserved the honour. Sir William Allan became unwell on Christmas Day, 1903, and passed away at his residence, Scotland House, Sunderland, from heart trouble, on the 28th December, 1903.

Sir William Allan joined the Institution as a Member in 1869.

CHARLES COLLIE was born at Aberdeen, and served his time as a boiler maker. For many years he was foreman with Archibald Hutcheson, engineer and ironfounder, Glasgow. In 1873 he started in business for himself. He died in October 1903.

Mr Collie became a Member of the Institution in 1898.

W. T. COURTIER-DUTTON, Chief Surveyor to the British Corporation Registry, was born in the Isle of Man in 1848, and died at his residence, Moraig, Helensburgh, on the last day of 1903.

He commenced the serious business of life in the office of a Liverpool solicitor, but the law not proving to his taste he became a premium apprentice with Messrs Thomas Vernon & Sons, shipbuilders, Liverpool, and remained in their service until 1874, when he left the post of manager to that firm to undertake the duties of Surveyor to the old Underwriters Registry for Iron Vessels. He was subsequently transferred from the Mersey to the Clyde, and was principal Surveyor for the Clyde district until the absorption of the Registry by Lloyd's in 1885, when he became one of the Staff of the latter Registry. Mr Courtier-Dutton was appointed Chief Surveyor to the British Corporation in 1892, shortly after the death of Professor Jenkins, bringing to the assistance of that Society the benefit of ripe experience, and mature judgment. He took a great interest in the work of the Engineering Standards Committee; of which he was a valued member, and made himself popular and esteemed by all who came into contact with him, by his rare combination of courtesy and dignity, supported by the knowledge born of wide experience.

Mr Courtier-Dutton became a Member of the Institution in 1896.

SAMUEL CRAWFORD was born at Paisley in 1838. He served an apprenticeship at wood and iron shipbuilding, and assisted at turning the frame of the first iron vessel built on the Forth and

Clyde Canal, at Maryhill. As a young man he entered the Government Service when iron shipbuilding was in its infancy, and was made "leading hand." He was subsequently engaged in succession, as foreman, with Messrs Robert Napier & Sons, Govan; The Fairfield Shipbuilding and Engineering Co., Govan; and Earle's Shipbuilding Co., Hull. Returning again to the Clyde he became shipyard manager with Messrs J. & G. Thomson, Clydebank, and remained connected with that firm for nearly twenty years.

Mr Crawford left Clydebank to associate himself with Messrs John Scott & Co., Kinghorn, of which firm he was the principal for upwards of eight years. Later he laid out and started the shipyard and graving dock at Garston, near Liverpool, for the Garston Graving Dock and Shipbuilding Co. At the time of his death, which took place suddenly at Liverpool, on 27th December, 1903, he was engaged with one of his sons in carrying on the business of consulting engineers and naval architects, under the title of Crawford & Co. He took a keen interest in municipal affairs and was for many years a Commissioner of the Burgh of Clydebank, and was also provost of the Royal Burgh of Kinghorn.

Mr Crawford joined the Institution as a Member in 1883.

Charles Merson Davies, the second son of Mr Charles Davies, who for 17 years was an engineer on the Great Indian Peninsula Railway, was born at Newton, Longville, Bucks, on 9th November, 1849. He was educated principally at Dollar Academy, and served an apprenticeship, from 1867-1871, with Messrs Dübs & Co., locomotive engineers, Glasgow, passing in turn through the following departments—pattern shop, fitting and turning shops, smithy, boiler shop, erecting shop, and drawing office. In 1873 Mr Davies went to India as mechanical engineer to Messrs T. C. Glover & Co., contractors for the construction of the Rajputana State Railway, from Agra to Nasirabad, and was engaged in the erection of the principal iron bridges on the line, until appointed assistant locomotive superintendent of that railway.

Three years later he became locomotive, carriage, and wagon superintendent of the Holkar and Scindia-Neemuch State Railway, and for a period of six months, in 1882, he officiated as locomotive, carriage, and wagon superintendent of the Rajputana State Railway. A year later he was transferred to the Nagpur and Chhattisgurgh State Railway in a similar capacity.

He resigned his appointment and left India in 1891. Returning to this country, he accepted the position of chief engineer to Messrs Dübs & Co,, and filled that post until his death, which took place on 19th June, 1904, at his residence, Leslie House, Pollokshields, after a long and painful illness.

Mr Davies took out several patents for tapping and drilling machines which have been extensively and profitably used in connection with the construction of locomotive boilers. By special request, he exhibited at the Conversazione held in the St. Andrew's Halls, in October, 1903, a varied selection of articles which he had designed and executed in ivory during his leisure, and the exhibit evoked considerable interest.

Mr Davies joined the Institution as a Member in 1900.

James Ferrier was born at Carnoustie, Forfarshire, in the year 1847. Early in his youth he was apprenticed to the well-known firm of Messrs Gourlay Brothers, engineers, Dundee. After the completion of his apprenticeship he went to sea for a voyage or two as engineer of a Dundee whaler. In the early seventies he went to China and took service with the China Steam Navigation Company and eventually became engineer-in-chief of the extensive fleet of vessels owned by that Company. For many years he resided in Shanghai where he was widely known.

Mr Ferrier retired from active business in 1900, and took up his residence in his native town. He died suddenly on 5th April 1903.

Mr Ferrier joined the Institution as a Member in 1896.

SAMSON FOX was born at Bradford on the 11th July, 1838, and at the early age of ten years worked at his father's trade of weaving. Some five years after he was apprenticed to Messrs Smith, Beacock, and Tannett, engineers and tool-makers, Leeds, and while in the employment of that firm he became in turn foreman, traveller, and its representative at the London exhibition of 1862.

When twenty-eight years of age Mr Fox commenced business as a tool-maker, and later he joined a brother and another partner in starting the Silver Cross Works, Leeds. In 1874 the Leeds Forge Company was established for the manufacture of iron, boiler plates, and forgings, with Mr Fox as its head. From small beginnings the Company rapidly developed until now it gives employment to 2000 workmen.

Mr Fox is best known as the inventor of the corrugated boiler furnace, the first patents for the manufacture of which he took out in 1877. The special machinery required for the production of these furnaces was devised by Mr Fox, as was also improved machinery for manufacturing boilers; and from first to last he took out about 150 patents for his various inventions. He developed the use of pressed steel for steel underframes for railway wagons, etc. In 1888 Mr Fox started works near Chicago, wherein was made the first pressed steel cars used in the United States. These works were purchased by an American Trust for a very large sum.

Mr Fox devoted a large share of his time to Municipal work. He was a member of the Corporation of Leeds for several years, and three times in succession Mayor of Harrogate. He was a lover of music, and he presented to the King (then Prince of Wales) £40,000 towards the Royal College of Music, Kensington. He was a member of the Legion of Honour of France. His death took place at his residence Daisy Bank, Walsall, on the 24th October, 1903, the immediate cause of which was blood poisoning.

Mr Fox joined the Institution as a Member in 1880.

for more than a century. His great granduncle Beaumont Neilson invented the hot-blast process which revolutionised the mode of manufacturing iron. Sixty-nine years ago his grandfather John Neilson, built the Fairy Queen, the first iron steamer that sailed on the Clyde. Early in life James Neilson became connected with the coal and iron business handed down in the family by his grandfather, and since its conversion into the Summerlee and Mossend Iron and Steel Co., he had been managing director.

Mr Neilson was closely connected with the public life of the County and the local affairs of the Middle Ward of Lanarkshire. For several years he was Chairman of the School Board of Bothwell parish; and on the establishment of the Lanarkshire County Council he was elected chairman of the District Committee. He was also chairman of the Lanarkshire and Dumbartonshire Railway Co., a director of the Caledonian Railway Co., and a member of the Scottish Board of the Liverpool and London and Globe Insurance Co.

In the West of Scotland he was best known through his connection with the Queen's own Yeomanry, with which regiment he was associated from his youth. He began as cornet, and passed through all the grades to the position of Colonel. He received the Honour of Companionship of the Bath on his retirement a year or two ago.

His death took place at his residence, Orbiston House, Bellshill, on the 6th October 1903.

Mr Neilson joined the Institution as a Member in 1897.

John Wilson died at Rothesay on 13th September, 1903, after a brief illness. Mr Wilson was born at Liverpool, on 13th December, 1821. Left an orphan at about ten years of age he entered the Blue Coat School of his native city. In 1835 he was bound as an apprentice for seven years with Messrs Mather and Dixon, ironfounders and engineers, Liverpool, where many of the early locomotives were designed and built. His next experience

was as an engineer in the steamship "Great Britain," which sailed from Liverpool in 1846 and getting out of her course ran ashore in Dundrum Bay, in the North of Ireland, and lay there for more than twelve months. For the next nine years Mr Wilson was employed in various railway works in England. In 1851 at Nine Elms, London; then at Edge Hill, Liverpool, where he assisted in erecting the stationary engine for working the incline through the railway tunnel; later, at the Crewe works of the London and North Western Railway Co.; and still later, as manager with Messrs Jackson, engineers, Manchester, where it is said the first solid rolled tyres for locomotives were made under his supervision.

Mr Wilson's next appointment was with Messrs Sharp, Stewart & Co., Manchester, where for some time he was erecting shop foreman and saw the first injector fitted to a locomotive. At the end of 1884 he entered into an agreement with Messrs Neilson & Co., Glasgow, to serve as a manager in their Hydepark Locomotive Works, at Springburn, a position he held for twenty years. On his retiral, due to ill health, he received such recognition from the firm and from the employees, as showed him to be a man who, while conserving the best interests of his employers, was not unmindful of those under his charge.

During his earlier years Mr Wilson was an active member and upholder of the engineers' trade union of the time. He joined the Manchester Association of Engineers in 1857, was a Vice-President in 1858, and President in 1859.

Mr Wilson joined the Institution as a Member in 1870.

Associates.

JOHN BROWN, son of the late Capt. James Brown, was born in Glasgow on the 24th July, 1854. He was educated at the Glasgow University, and took his degree of B.Sc., there. Most of his life was

given up to scientific and philanthropic work. He died at his residence, Somerset Place, Glasgow, on 3rd April, 1903.

Mr Brown was a life Associate of the Institution which he joined in 1876.

WILLIAM MANN was born at East Kilbride in June 1853, and received his education there and at the Glasgow High School. He began his business life at the age of sixteen years with Mr Martine, Danish Consul in Glasgow. Ten years later he started in business on his own account as a shipping agent, and after a period of two years accepted the position of managing partner with the firm of Messrs John Little & Co., shipowners, and remained in that capacity for five years. He then became associated with Messrs Bell Brothers & M'Lelland, and at the time of his death was managing partner of that firm.

Mr Mann took an active interest in public affairs and was a Justice of the Peace for Glasgow and Renfrewshire, and a member of the County Council of Renfrew. He died suddenly at Whitecraigs, Giffnock, on the 29th May 1904.

Mr Mann became an Associate of the Institution in 1900.

Students.

JAMES G. DUNCAN was born in October, 1877, at Port-Glasgow, where he received his education. He was apprenticed to the firm of Messrs Muir and Houston, engineers, Kinning Park, Glasgow; and on the completion of his apprenticeship he accepted an appointment as draughtsman with the Tang-Jong Pagar Dock Co., Singapore, where he remained for three and a half years. Ill health compelled him to return to this country, and he died in Glasgow on the 8th July, 1904.

Mr Duncan joined the Institution as a Graduate in 1898.

ROBERT LOWE was born at Rothesay on 21st May, 1878, and received his education at the Academy in that town, and at the Technical College, Glasgow. He served his apprenticeship with Messrs Muir & Houston, engineers, Kinning Park, Glasgow, and thereafter entered the service of Messrs Clark, Chapman & Co., Gateshead-on-Tyne. He returned to Glasgow, and took up an appointment with Messrs Mavor & Coulson, Glasgow, leaving shortly after to join the engineering staff at the General Post Office, Glasgow.

He died at Glasgow on the 20th February, 1904.

Mr Lowe joined the Institution as a Graduate in 1901.

LIST OF HONORARY MEMBERS, MEMBERS, ASSOCIATE MEMBERS, ASSOCIATES, AND STUDENTS

AT CLOSE OF SESSION 1903-1904.

HONORARY MEMBERS.

	DATE OF ELECTION.
KELVIN, Lord, G.C.V.O., O.M., P.C., LL.D., D.C.L., Netherhall, Largs,	1859
BRASSEY, Lord, K.C.B., D.C.L., 4 Great George street, Westminster, London, S.W.,	1891
BLYTHSWOOD, Lord, Blythswood, Renfrewshire,	1891
KENNEDY, Professor A. B. W., LL.D., F.R.S., 17 Victoria street, London, S.W.,	1891
MURRAY, Sir DIGBY, Bart., Hothfield, Parkstone, Dorset,	1891
WHITE, Sir WILLIAM HENRY, K.C.B., F.R.S., LL.D., D.Sc., Cedar Croft, Putney Heath, London, S.W.,	1894
DURSTON, Sir A. J., K.C.B., Westcomlea, Park Road, Blackheath, London, S.E.,	1896
FROUDE, R. E., F.R.S., Admiralty Experiment works, Gosport,	1897

MEMBERS.

	DATE OF ELECTION.
AAMUNDSEN, JENS L., 57 Classensgade, 2 Sal, Copenhagen, Denmark,	24 Jan., 1899
ABERCROMBIE, ROBERT GRAHAM, Broad Street Engine Works, Alloa,	21 Mar., 1899
ADAM, J. MILLEN, Ibrox Iron works, Glasgow,	G. 25 Mar., 1890 M. 22 Jan., 1895
ADAMSON, JAMES, St. Quivox, Stopford road, Upton Manor, Essex,	23 Apr., 1889
ADAMSON, PETER HOGG, 2 Thornwood terrace, Partick,	19 Mar., 1901
AILSA *(The most Honourable the Marquis of)*, Culzean castle, Maybole,	25 Jan., 1898

Names marked thus * were Members of Scottish Shipbuilders' Association at Incorporation with Institution, 1865.

Names marked thus † are Life Members.

AITKEN, H. WALLACE, 147 Bath Street, Glasgow, {G. 24 Jan., 1888 / M. 24 Jan., 1899}

AITON, J. ARTHUR, Western Works, Hythe Road, Willesden Junction, London, N.W., 24 Nov., 1896

ALEXANDER, JOHN, Engineer, Barrhead, 19 Mar., 1901

ALLAN, ROBERT, La Maisonette, Mount Cochen, Jersey, 30 Apr., 1895

ALLEY, STEPHEN E., 8 Woodside terrace, Glasgow, 23 Nov., 1897

†ALLIOTT, JAMES B., The Park, Nottingham, 21 Dec., 1864

ALLO, OSCAR EDWARD, 100 Bothwell street, Glasgow, 22 Mar., 1904

ALSTON, WILLIAM M., 24 Sardinia terrace, Hillhead, Glasgow, {G. 15 Feb., 1865 / M. 18 Dec., 1877}

†AMOS, ALEXANDER, Glen Alpine, Werris Creek, New South Wales, 21 Dec., 1886

†AMOS, ALEXANDER, Jun., Braeside, 81 Victoria Street (North), Darlinghurst, Sydney, New South Wales, 21 Dec., 1886

ANDERSON, ALEXANDER, 176 Balgray hill, Springburn, Glasgow, 24 Nov., 1903

ANDERSON, ALFRED WALTER, Blackness Foundry, Dundee, 27 Oct., 1903

†ANDERSON, E. ANDREW, c/o Clinton, 13 Holmhead street, Glasgow, 21 Feb., 1899

ANDERSON, F. CARLTON, c/o Messrs G. Harland, Bowden & Co., 196 Deansgate, Manchester, 23 Apr., 1901

ANDERSON, GEORGE C., 18 Balmoral drive, Cambuslang, {G. 24 Dec., 1895 / M. 27 Oct., 1903}

ANDERSON, J. GODFREY, B.Sc., c/o Messrs James Templeton & Co., Greenhead, Glasgow, 19 Mar., 1901

ANDERSON, JAMES, Princes Dock Engine works, Fairley street, Govan, {G. 24 Feb., 1874 / M. 23 Nov., 1880}

†ANDERSON, JAMES, Ravelston, Great Western Road, Glasgow, 26 Nov., 1901

ANDERSON, JAMES H., Caledonian Railway, Glasgow, 20 Dec., 1892

ANDERSON, ROBERT, Clyde Street, Renfrew, 26 Jan., 1897

ANDERSON, WILLIAM MARTIN, Princes Dock Engine works, Fairley street, Govan, 18 Dec., 1900

ANDERSON, WILLIAM SMITH, Alderwood East, Port-Glasgow, 21 Nov., 1899

ANDREWS, H. W., 128 Hope street, Glasgow, {A. 21 Dec., 1897 / M. 24 Oct., 1899}

ANDREWS, JAMES, Blythswood Chambers, 180 West Regent street, Glasgow, 22 Nov., 1898

ANGUS, ROBERT, Lugar, Old Cumnock, Ayrshire, 28 Nov., 1860

ANIS, Professor MOHAMED, Bey, Ministère des Travaux Publics, Cairo, 24 Apr., 1894

ARCHER, W. DAVID, 47 Croham road, Croyden, Surrey, 20 Dec., 1887

ARNOT, WILLIAM, 21 Havelock street, Partick, Glasgow, 26 Apr., 1904

ARNOTT, HUGH STEELE, 99 Clarence drive, Hyndland, Glasgow, G. 26 Oct., 1897 M. 22 Jan., 1901

ARROL, THOMAS, 23 Doune terrace, Kelvinside, Glasgow, 27 Oct., 1903

ARROL, THOMAS, Jun., Oswald gardens, Scotstounhill, Glasgow, 20 Nov., 1894

†ARROL, Sir WILLIAM, LL.D., M.P., Dalmarnock Iron works, Glasgow, 27 Jan., 1885

ARROL, WILLIAM, 23 Doune terrace, Kelvinside, Glasgow, 27 Oct., 1903

AULD, JOHN, Whitevale foundry, Glasgow, 28 Apr., 1885

AUSTIN, WM. R., 28 Ardgowan Street, Greenock, 23 Feb., 1897

BAILLIE, ROBERT, c/o Stirling Boiler Company, Limited, 75 Bath street, Glasgow, 20 Nov., 1900

BAIN, WILLIAM N., 40 St. Enoch square, Glasgow, 24 Feb., 1880

BAIN, WILLIAM P. C., Lochrin Iron works, Coatbridge, 25 Apr., 1891

BAIRD, ALLAN W., Eastwood villa, St. Andrew's drive, Pollokshields, Glasgow, 25 Oct., 1881

BALDERSTON, JAMES, Gateside, Paisley, 25 Jan., 1898

BALDERSTON, JOHN A., Vulcan Works, Paisley, 18 Dec., 1900

BALFOUR, GEORGE, Messrs J. G. White & Co., Ltd., 22a College hill, Cannon street, London, E.C., 21 Mar., 1899

BALLINGALL, DAVID, c/o Messrs. Richard Hornsby & Son, Ltd., Spittlegate Iron Works, Grantham, 27 Oct., 1896

BAMFORD, HARRY, M.Sc., The University, Glasgow, 24 Nov., 1896

BARCLAY, GEORGE, Vulcan works, Paisley, 25 Jan., 1898

BARMAN, HARRY D. D., 21 University avenue, Glasgow, G. 24 Apr., 1888 M. 24 Oct., 1899

BARNETT, J. R., Westfield, Crookston, 22 Dec., 1896

BARNETT, MICHAEL R., Engineer's Office, Laurel Bank, Lancaster, 22 Nov., 1887

BARR, Professor ARCHIBALD, D.Sc., Royston, Dowanhill, Glasgow, 21 Mar., 1882

BARR, JOHN, Glenfield Company, Kilmarnock, A. 28 Oct., 1883 M. 25 Jan., 1898

BARROW, JOSEPH, Messrs Thomas Shanks & Co., Johnstone, 19 Feb., 1901

BAXTER, GEORGE H., Clyde Navigation works, Dalmuir, 22 Mar., 1881

BAXTER, P. M'L., Copland works, Govan, G. 22 Dec., 1885 M. 15 June, 1898

BEARDMORE, JOSEPH GEORGE, Parkhead Forge, Glasgow, 22 Nov., 1898

BEARDMORE, WILLIAM, Parkhead forge, Glasgow, 27 Oct., 1896

BEGBIE, WILLIAM, P.O. Box 459, Johannesburg, South Africa, 15 June, 1898

*†BELL, DAVID, 19 Eton place, Hillhead, Glasgow.

BELL, IMRIE, 49 Dingwall road, Croydon, Surrey, 23 Mar., 1880

BELL, STUART, 65 Bath street, Glasgow, 26 Feb., 1895

BELL, THOMAS, Messrs John Brown & Co., Ltd., Clydebank, G. 26 Apr., 1887; M. 27 Apr., 1897

BELL, W. REID, Transvaal Department of Irrigation and Water Supply, Box 78, Potchefstroom, South Africa, 22 Jan., 1889

BENNIE, H. OSBOURNE, Clyde Engine works, Cardonald, Glasgow, 25 Jan., 1898

BERGIUS, W. C., 77 Queen street, Glasgow, 23 Jan., 1900

BEVERIDGE, RICHARD JAMES, 53 Waring street, Belfast, 22 Feb., 1898

BIGGART, ANDREW S., Inchgarvie, 39 Sherbrooke avenue, Pollokshields, Glasgow, G. 20 Mar., 1883; M. 25 Nov., 1884

BILES, Professor JOHN HARVARD, LL.D., The University, Glasgow, 25 Mar., 1884

BINNEY, WILLIAM H., Marine Superintendent, Holyhead, 26 Jan., 1897

BINNIE, R. B. JARDINE, Carntyne Works, Parkhead, 24 Dec., 1901

BIRD, JOHN R., 10 Morrison street, Glasgow, 25 Mar., 1890

BISHOP, ALEXANDER, 3 Germiston street, Glasgow, G. 24 Mar., 1885; M. 24 Jan., 1899

BLACK, JOHN W., 108a West Regent street, Glasgow, G. 25 Oct., 1892; M. 27 Oct., 1903

BLAIR, ARCHIBALD, 21 Havelock street, Dowanhill, Glasgow, G. 27 Oct., 1885; M. 27 Oct., 1903

BLAIR, DAVID A., Scotland street Copper works, Glasgow 23 Mar., 1897

BLAIR, FRANK R., Ashbank, Maryfield, Dundee, G. 22 Mar., 1892; M. 21 Apr., 1903

BLAIR, GEORGE, Jun., 38 Queen street, Glasgow, G. 22 Jan., 1884; M. 23 Feb., 1897

BLAIR, JAMES M., Williamcraigs, Linlithgowshire, 27 Mar., 1867

BONE, WILLIAM L., Ant and Bee works, West Gorton, Manchester, 23 Oct., 1883

BOOTH, ROBERT, Glengelder, Cowey road, Durban, Natal, 26 Jan., 1904

BORROWMAN, WILLIAM C., Strathmore, West Hartlepool, G. 27 Oct., 1887; M. 26 Oct., 1895

BOST, W. D. ASHTON, Adelphi house, Paisley, 25 Jan., 1898

BOW, WILLIAM, Thistle works, Paisley, 27 Jan., 1891

BOWMAN, WILLIAM DAVID, 21 Kersland terrace, Hillhead, Glasgow, G. 22 Dec., 1891; M. 24 Nov., 1903

BOWSER, CHARLES HOWARD, Charles street, St. Rollox, Glasgow, 21 Mar., 1899

BOYD, WILLIAM, The Tharsis Sulphur and Copper Co., Ltd., Hebburn-on-Tyne, 24 Oct., 1899

BRACE, GEORGE R., 25 Water street, Liverpool, 25 Mar., 1890

BRAND, MARK, B.Sc., Barrhill cottage, Twechar, Kilsyth, G. 24 Jan., 1888 M. 21 Apr., 1903

BREINGAN, W. D., Barns place, Clydebank, 22 Jan., 1901

BREWER, J. ALFRED, 249 West George street, Glasgow, 20 Nov., 1900

BRIER, HENRY, 1 Miskin road, Dartford, Kent, 22 Dec., 1891

BROADFOOT, JAMES, Lymehurst, Jordanhill, G. 23 Dec., 1873 M. 22 Jan., 1884

BROADFOOT, WILLIAM R., Inchholm works, Whiteinch, 25 Jan., 1898

BROCK, HENRY W., Engine works, Dumbarton, 30 Apr., 1895

*BROCK, WALTER, Engine works, Dumbarton, 26 Apr., 1865

BROCK, WALTER, Jun., Levenford, Dumbarton, 27 Oct., 1896

BROOM, THOMAS M., 11 Union street, Greenock, 25 Apr., 1893

BROWN, ALEXANDER D., Dry Dock, St. John's, Newfoundland, 22 Dec., 1896

BROWN, ALEXANDER T., 18 Glencairn drive, Pollokshields, Glasgow, G. 25 Feb., 1879 M. 27 Oct., 1891

*†BROWN, ANDREW, London works, Renfrew, 16 Feb., 1859

BROWN, ANDREW M'N., Strathclyde, Dalkeith avenue, Dumbreck, Glasgow, G. 25 Jan., 1876 M. 24 Nov., 1885

†BROWN, DAVID A., 41 Rosslyn crescent, Edinburgh, G. 23 Feb., 1897 M. 27 Oct., 1903

BROWN, EBENEZER HALL-, Helen street Engine works, Govan, G. 18 Dec., 1883 M. 26 Feb., 1895

BROWN, GEORGE, Garvel Graving Dock, Greenock, 23 Mar., 1886

BROWN, J. POLLOCK, 1 Broomhill avenue, Partick, Glasgow, G. 18 Dec., 1894 M. 22 Dec., 1903

BROWN, JAMES, c/o Messrs. Scott & Co., Greenock G. 26 Oct., 1886 M. 26 Jan., 1892

BROWN, JAMES M'N., 15 Falkland Mansions, Hyndland, Glasgow, 26 Jan., 1897

BROWN, MATTHEW T., B.Sc., 21 Bisham gardens, Highgate, London, N., G. 25 Jan., 1881 M. 18 Dec., 1894

BROWN, ROBERT, 7 Church road, Ibrox, Glasgow, 18 Feb., 1902

BROWN, WALTER, Monkdyke, Renfrew, 28 Apr., 1885

BROWN, WILLIAM, Meadowflat, Renfrew, G. 27 Jan., 1874 M. 22 Jan., 1884

BROWN, WILLIAM, Albion works, Woodville street, Govan, 21 Dec., 1880

BROWN, WILLIAM, Messrs Dübs & Co., Glasgow Locomotive works, Glasgow, 17 Dec., 1889

BROWN, WILLIAM DEWAR, 25 Mar., 1890

BRUHN, JOHANNES, D.Sc., 23 Methuen park, Muswell hill, London, N., G. 24 Oct., 1893 M. 22 Feb., 1898

BRYAN, MATTHEW REID, 1 Royal terrace, Springburn, Glasgow, 24 Nov., 1903

BRYSON, WILLIAM ALEXANDER, 16 Charlotte street, Leith, 27 Oct., 1896

BUCHANAN, JOHN H., 5 Oswald street, Glasgow, 23 Jan., 1900

BUCKWELL, GEORGE W., Board of Trade Surveyor's Office, Barrow-in-Furness, 27 Apr., 1897

BUDENBERG, CHRISTIAN FREDERICK, 31 Whitworth street, Manchester, 20 Dec., 1898

BULLARD, E. P., Jun., Bridgeport, Conn., U.S.A., 29 Oct., 1901

BURDEN, ALFRED GEORGE NEWKEY, c/o Messrs Harvey & Co., Box 953, Johannesburg, South Africa, 20 Feb., 1900

BURNSIDE, WILLIAM, 3 Armadale street, Dennistoun, Glasgow, 27 Oct., 1903

BURT, THOMAS, 60 St. Vincent crescent, Glasgow, 22 Mar., 1881

BUTTERS, JAMES THOMAS, Percy Crane & Engine Works, Glasgow, 19 Mar., 1901

BUTTERS, MICHAEL W., 20 Waterloo street, Glasgow, 24 Oct., 1899

CAIRD, ARTHUR, Messrs Caird & Co., Ltd., Greenock, 27 Oct., 1896

†CAIRD, EDWARD B., 777 Commercial road, Limehouse, London, 29 Oct., 1878

†CAIRD, PATRICK T., Messrs Caird & Co., Ltd., Greenock, 27 Oct., 1896

CAIRD, ROBERT, LL.D., Messrs Caird & Co., Ltd., Greenock, 20 Feb., 1894

CALDER, JOHN, 18 St. Austin's place, West New Brighton, New York, U.S.A., G. 24 Feb., 1891; M. 27 Oct., 1903

CALDERWOOD, WILLIAM T., Stanley villa, Kilmailing, Glasgow, 25 Jan., 1898

CALDWELL, JAMES, 130 Elliot street, Glasgow, 17 Dec., 1878

CAMERON, ANGUS, 175 West George street, Glasgow, 18 Feb., 1902

CAMERON, DONALD, 7 Bedford circus, Exeter, 25 Feb., 1890

CAMERON, HUGH, 40 Camperdown road, Scotstoun, Glasgow, G. 25 Oct., 1892; M. 27 Oct., 1903

CAMERON, JOHN B., 111 Union street, Glasgow 24 Mar., 1885

CAMERON, WILLIAM, Ashgrove, Whitehaugh drive, Paisley, 25 Mar., 1890

CAMPBELL, ANGUS, 90 Southgrove road, Sheffield, G. 24 Jan., 1888; M. 27 Oct., 1903

CAMPBELL, DUNCAN, Carntyne foundry and engineering works, Parkhead, Glasgow, 23 Jan., 1900

CAMPBELL, HUGH, The Campbell Gas Engine Company, Halifax, Yorkshire, 18 Dec., 1900

CAMPBELL, JAMES, 104 Bath street, Glasgow, 18 Dec., 1900

CAMPBELL, JOHN, 169 Clapham road, London, S.W., 21 Jan., 1890

†CAMPBELL, THOMAS, Maryhill Iron works, Glasgow, 20 Nov., 1900

CAMPBELL, WALTER HOPE, 42 Krestchatik, Kieff, South Russia, 25 Apr., 1899

CAREY, EVELYN G., 4 Sunnyside avenue, Uddingston, 22 Oct., 1889

CARLAW, ALEX. L., 11 Finnieston street, Glasgow, 24 Dec., 1895

CARLAW, DAVID, Jun., 11 Finnieston street, Glasgow, 24 Dec., 1895

CARLAW, JAMES W., 11 Finnieston street, Glasgow, 24 Dec., 1895

CARMICHAEL, ANGUS T., 3 Harvey street, Paisley road, W., Glasgow, 19 Mar., 1901

CARRUTHERS, JOHN H., Ashton, Queen Mary avenue, Crosshill, Glasgow, 22 Nov., 1881

CARSLAW, WILLIAM H., Jun., Parkhead Boiler works, Parkhead, Glasgow, G. 23 Dec., 1890 M. 27 Oct., 1903

CARVER, THOMAS, A. B., D.Sc., 118 Napiershall street, Glasgow, 19 Feb., 1901

CHALMERS, WALTER, Cathage, Milngavie, 23 Jan., 1900

CHAMEN, W. A., 75 Waterloo street, Glasgow, 22 Feb., 1898

CHISHOLM ROBERT, 1 Albany quadrant, Springboig, Shettleston, 29 Oct., 1901

CHRISTIE, JOHN, Corporation Electricity Works, Brighton, 22 Nov., 1898

CHRISTIE, R. BARCLAY, Messrs M'Lay & M'Intyre, 21 Bothwell street, Glasgow, 25 Apr., 1893

CHRISTISON, GEORGE, 13 Cambridge drive, Glasgow, 22 Feb., 1898

CLARK, JAMES LESTER, Dublin Dockyard Company, Northwall, Dublin, 24 Nov., 1896

CLARK, JOHN, British India Steam Navigation Co., 9 Throgmorton avenue, London, E.C., 23 Jan., 1883

CLARK, WILLIAM, 208 St. Vincent street, Glasgow, 25 Apr., 1893

CLARK, WILLIAM, Companhia Carris de Ferro de Lisbon, Lisbon, Portugal, 22 Dec., 1896

CLARK, WILLIAM, 23 Royal Exchange square, Glasgow, 26 Jan., 1904

CLARK, WILLIAM GRAHAM, 29 Church road, Waterloo, Liverpool, 22 Feb., 1898

CLARKSON, CHARLES, 20 Macaulay road, Birkby, Huddersfield, 27 Oct., 1891

CLEGHORN, ALEXANDER, 10 Whittingehame drive, Kelvinside, Glasgow, 22 Nov., 1892

CLELAND, W. A., Yloilo, Philippine Islands, G. 25 Apr., 1893 M. 25 Nov., 1902

CLYNE, JAMES, Messrs Clyne, Mitchell, & Co., Commercial road, Aberdeen, 18 Dec., 1900

COATS, ALLAN, Jun., B.Sc., Hayfield, Paisley, 23 Oct., 1900

COATS, JAMES, 362 Maxwell road, Pollokshields, Glasgow, 21 Dec., 1897

COCHRAN, JAMES T., 52 Woodville gardens, Langside, Glasgow, 26 Feb., 1884

COCHRANE, JAMES, Resident Engineer's Office, Harbour works, Table Bay, Capetown, — G. 27 Oct., 1891; M. 22 Dec., 1903

COCHRANE, JOHN, Grahamston foundry, Barrhead, — 25 Mar., 1890

COCKBURN, GEORGE, Cardonald, near Glasgow, — 25 Oct., 1881

COCKBURN, ROBERT, Cumbrae House, Dumbreck, Glasgow, — 25 Jan., 1898

COLVILLE, ARCHIBALD, 51 Clifford street, Bellahouston, Govan, — 23 Jan., 1900

COLVILLE, ARCHIBALD, Motherwell, — 27 Oct., 1896

COLVILLE, DAVID, Jerviston house, Motherwell, — 27 Oct., 1896

CONNELL, CHARLES, Whiteinch, Glasgow, — G. 19 Dec., 1876; M. 25 Mar., 1884

CONNER, ALEXANDER, 6 Grange Knowe, Irvine road, Kilmarnock, — G. 26 Feb., 1884; M. 24 Jan., 1899

CONNER, BENJAMIN, 196 St. Vincent street, Glasgow, — G. 22 Dec., 1885; M. 26 Oct., 1897

CONNER, JAMES, North British Locomotive Co., Ltd., Hydepark works, Glasgow, — G. 18 Dec., 1877; M. 24 Nov., 1885

CONNER, JAMES, English Electric Manufacturing Co., Limited, Preston, — 20 Nov., 1900

CONSTANTINE, EZEKIEL GRAYSON, 53 Deansgate arcade, Manchester, — 26 Apr.. 1904

COPELAND, JAMES, St. Andrew's, Bearsden, — 17 Feb., 1864

COPESTAKE, S. G. G., Glasgow Locomotive works, Little Govan, Glasgow, — 11 Mar., 1868

†COPLAND, WILLIAM R., 146 W. Regent street, Glasgow, — 20 Jan., 1864

CORMACK, Prof. JOHN DEWAR, B.Sc., University College, Gower street, London, W.C., — 24 Nov., 1896

COSTIGANE, A. PATON, Lymekilns, East Kilbride, — 20 Jan., 1903

COULSON, W. ARTHUR, 47 King street, Mile-end, Glasgow, — 15 June, 1898

COUPER, SINCLAIR, Moore Park Boiler works, Govan, — G. 21 Dec., 1880; M. 27 Oct., 1891

COUSINS, JOHN BOOTH, 75 Buchanan street, Glasgow, — 22 Mar., 1904

COUTTS, FRANCIS, 280 Great Western road, Aberdeen, — G. 27 Oct., 1885; M. 24 Jan., 1899

COWAN, DAVID, Coulport house, Loch Long, Dumbartonshire, — 24 Apr., 1900

COWAN, JOHN, 8 Wilton mansions, Kelvinside N., Glasgow, — 27 Apr., 1897

COWAN, JOHN, Clydebridge Steel Co., Ltd., Cambuslang, — 16 Dec., 1902

†COWIE, WILLIAM, 51 Endsleigh gardens, Ilford, Essex, — 20 Feb., 1900

CRAIG, ALEXANDER, 163 West George street, Glasgow, — G. 26 Nov., 1895; M. 16 Dec., 1902

CRAIG, ARCHIBALD FULTON, Belmont, Paisley, — 25 Jan., 1898

CRAIG, JAMES, Lloyd's Registry, 14 Cross-shore street, Greenock, G. 20 Dec., 1897 M. 21 Dec., 189[2]

CRAIG, JOHN, Broom, Newton Mearns, 22 Jan., 1900

CRAN, JOHN, Albert Engine works, Leith, 21 Jan., 1902

CRAWFORD, JAMES, 30 Ardgowan street, Greenock, 27 Oct., 1896

CRIGHTON, J., Rotterdamsche Droogdok, Maatschappy, Rotterdam, Holland, G. 23 Nov., 1897 M. 20 Jan., 1903

CRIGHTON, JOHN, Claes de Vrieselaam 137, Rotterdam, Holland, G. 26 Nov., 1901 A.M. 20 Jan., 1903 M. 22 Dec., 1903

CROCKATT, WILLIAM, 179 Nithsdale road, Pollokshields, Glasgow, 22 Mar., 1881

CROSHER, WILLIAM, 121 St. Vincent street, Glasgow, 24 Jan., 1899

CROW, JOHN, Engineer, 236 Nithsdale road, Pollokshields, Glasgow, 25 Jan., 1898

CUMMING, WM. J. L., Motherwell Bridge Co., Motherwell, 24 Jan., 1899

CUNNINGHAM, PETER N., Easter Kennyhill House, Cumbernauld road, Glasgow, 28 Dec., 1884

CUNNINGHAM, P. NISBET, Jun., Easter Kennyhill House, Cumbernauld road, Glasgow, G. 22 Nov., 1898 M. 3 May, 1904

CUTHILL, WILLIAM, Beechwood, Uddingston, 24 Nov., 1896

DARROCH, JOHN, 27 South Kinning place, Paisley road, Glasgow, 24 Jan., 1899

DAVIDSON, DAVID, 17 Regent Park square, Strathbungo, Glasgow, G. 22 Mar., 1881 M. 18 Dec., 1888

DAVIE, JAMES, 11 Glencairn drive, Pollokshields W., Glasgow, 19 Dec., 1899

DAVIE, WILLIAM, 50 Lennox avenue, Scotstoun, Glasgow, 22 Dec., 1903

DAVIS, CHARLES H., 25 Broad street, New York, U.S.A., 20 Nov., 1900

DAVIS, HARRY LLEWELYN, Messrs Cochran & Co., Ltd., Newbie, Annan, G. 18 Dec., 1888 M. 23 April, 1901

DAWSON, CHARLES E., 571 Sauchiehall street, Glasgow, 21 Jan., 1902

DAY, CHARLES, Huntly lodge, Ibroxholm, Glasgow, 24 Nov., 1903

DELACOUR, FRANK PHILIP, Baku, Russia, 24 Apr., 1900

DELMAAR, FREDERICK ANTHONY, Sourabaya, Netherlands East Indies, G. 24 Apr., 1883 M. 24 Oct., 1899

DEMPSTER, JAMES, 7 Knowe terrace, Pollokshields, Glasgow, 24 Jan., 1899

DENHOLM, JAMES, 40 Derby street, Glasgow, 21 Nov., 1883

DENHOLM, WILLIAM, Meadowside Shipbuilding yard, Partick, Glasgow, G. 18 Dec., 1883 M. 21 Nov., 1893

DENNY, ARCHIBALD, Braehead, Dumbarton, 21 Feb., 1888

DENNY, JAMES, Engine works, Dumbarton, 25 Oct., 1887
DENNY, Col. JOHN M., M.P., Garmoyle, Dumbarton, 27 Oct., 1896
DENNY, LESLIE, Leven Shipyard, Dumbarton, 30 Apr., 1895
DENNY, PETER, Bellfield, Dumbarton, 21 Feb., 1888
†DEWRANCE, JOHN, 165 Great Dover street, London, S.E., 19 Feb., 1901
DICK, FRANK W., c/o The Parkgate Steel & Iron Co., Ltd., Parkgate, Rotherham. 19 Mar., 1878
DICK, JAMES, 12 Ronald street, Coatbridge, 18 Mar., 1902
DIMMOCK, JOHN WINGRAVE, Lloyd's Register of Shipping, 342 Argyle street, Glasgow, 22 Mar., 1898
DIXON, JAMES S., 127 St. Vincent street, Glasgow, G. 24 Dec., 1878 / M. 22 Jan., 1878
DIXON, WALTER, Derwent, Kelvinside gardens, Glasgow, 26 Feb., 1895
DOBSON, WILLIAM, The Chesters, Jesmond, Newcastle-on-Tyne, 17 Jan., 1871
DODD, T. J., Lloyd's Register of Shipping, 342 Argyle street, Glasgow, 20 Nov., 1900
D'OLIVEIRA, RAPHAEL CHRYSOSTOME, Campos Rio de Janeiro, Brazil, 20 Feb., 1900
DONALD, B. B., Low Balernock, Petershill, Glasgow, G. 20 Mar., 1888 / M. 24 Jan., 1899
DONALD, DAVID P., Johnstone, 21 Mar., 1899
DONALD, ROBERT HANNA, Abbey works, Paisley, 22 Nov., 1892
DONALDSON, A. FALCONER, Beechwood, Partick, G. 27 Oct., 1896 / M. 16 Dec., 1902
DONALDSON, JAMES, Almond villa, Renfrew, 25 Jan., 1876
†DOUGLAS, CHARLES STUART, B.Sc., "St. Brides," 12 Dalziel drive, Pollokshields, Glasgow, G. 24 Jan., 1899 / M. 3 Mar., 1903
DOWNIE, A. MARSHALL, B Sc., London road Iron works, Glasgow, 21 Nov., 1899
DOYLE, PATRICK, F.R.S.E., 7 Government place, Calcutta, India, 23 Nov., 1886
DREW, ALEXANDER, 14 Talbot House, St. Martin's lane, London, W.C., 29 Apr., 1890
DRON, ALEXANDER, 59 Elliot street, Glasgow, 27 Oct., 1903
DRUMMOND, WALTER, The Glasgow Railway Engineering works, Govan, Glasgow, 26 Mar., 1895
DRYSDALE, JOHN W. W., 3 Whittingehame gardens, Kelvinside, Glasgow, 23 Dec., 1884
DUNCAN, GEORGE F., 12 Syriam terrace, Broomfield road, Springburn, Glasgow, G. 23 Nov., 1886 / M. 20 Mar., 1894
DUNCAN, GEORGE THOMAS, Cumledge, Uddingston, 15 Apr., 1902
DUNCAN, HUGH, 11 Hampden terrace, Mount Florida, Glasgow, 15 June, 1898
DUNCAN, JOHN, Ardenclutha, Port-Glasgow, 23 Nov., 1886
DUNCAN, ROBERT, Whitefield Engine works, Govan, 25 Jan., 1881

DUNCAN, W. LEES, Partick foundry, Partick, 18 Dec., 1900

DUNKERTON, ERNEST CHARLES, 43 Cecil street, Hillhead, Glasgow, 17 Feb., 1903

DUNLOP, DAVID JOHN, Inch works, Port-Glasgow, 23 Nov., 1869

DUNLOP, JOHN G., Clydebank, Dumbartonshire, 23 Jan., 1877

DUNLOP, THOMAS, 156 Hyndland road, Glasgow, 19 Dec., 1899

DUNLOP, WILLIAM, 119 Schneider terrace, Barrow-in-Furness, G. 22 Jan., 1884; M. 24 Jan., 1899

DUNLOP, WILLIAM A., Harbour Office, Belfast, 23 April, 1901

DUNN, J. R., 42 Magdalen Yard road, Dundee, 16 Dec., 1902

DUNN, JAMES, Engineer, Collalis, Scotstounhill, Glasgow, 23 April, 1901

†DUNN, PETER L., 815 Battery street, San Francisco, U.S.A., 26 Oct., 1886

†DUNSMUIR, HUGH, Govan Engine Works, Govan, 21 Apr., 1903

DYER, HENRY, M.A., D.Sc., 8 Highburgh terrace, Dowanhill, Glasgow, 28 Oct., 1883

EDWARDS, CHARLES, The Greenock Foundry Company, Greenock, 26 Oct., 1897

ELGAR, FRANCIS, LL.D., F.R.SS., L.& E., 34 Leadenhall street, London, E.C., 24 Feb., 1885

ELLIOTT, ROBERT, B.Sc., Lloyd's Surveyor, Greenock, G. 24 Mar., 1885; M. 21 Feb., 1898

EWEN, PETER, The Barrowfield Ironworks, Ltd., Craigielea, Bothwell, 21 Mar., 1899

FAICKNEY, ROBERT, 3 Thornwood terrace, Partick, 20 Nov., 1900

FAIRWEATHER, WALLACE, 62 St. Vincent st., Glasgow, 24 Apr., 1894

FERGUSON, DAVID, Glenholm, Port-Glasgow, 29 Oct., 1901

FERGUSON, JOHN JAMES, Kennard, Kirn, 24 Jan., 1899

FERGUSON, LOUIS, 8 Belhaven terrace, Kelvinside, Glasgow, G. 22 Jan., 1895; M. 26 Nov., 1901

FERGUSON, PETER, Caerlon, Paisley, G. 22 Jan., 1895; M. 26 Nov., 1901

FERGUSON, PETER, 8 Belhaven terrace, Kelvinside, Glasgow, 22 Oct., 1889

FERGUSON, WILFRED H., 4 Thornwood terrace, Partick, 22 Nov., 1898

FERGUSON, WILLIAM D., 3 Mount Delphi, Antrim road, Belfast, G. 27 Jan., 1885; M. 20 Mar., 1894

FERGUSON, WILLIAM R., Messrs Barclay, Curle & Co., Ltd., Whiteinch, Glasgow, G. 22 Feb., 1881; M. 22 Jan., 1895

FERRIER, HUGH, 48 Daisy street, Govanhill, Glasgow, 22 Dec., 1903

FIFE, WILLIAM, Messrs William Fife & Sons, Fairlie, Ayrshire, 28 Apr., 1903

FINDLAY, ALEXANDER, M.P., Parkneuk Iron works, Motherwell, 27 Jan., 1880

FINDLAY, LOUIS, 50 Wellington street, Glasgow, G. 21 Feb., 1893 M. 27 Oct., 1903

FINLAYSON, FINLAY, Laird street, Coatbridge, 23 Dec., 1884

FISHER, ANDREW, St. Mirren's Engine works, Paisley, 25 Jan., 1898

FLEMING, ANDREW E., Kandy, Ceylon, 23 Jan., 1894

FLEMING, GEORGE E., Messrs Dewrance & Co., 79 West Regent street, Glasgow, 27 Oct., 1896

FLEMING, JOHN, Dellburn works, Motherwell, 24 Jan., 1899

FLETCHER, JAMES, 15 Kildonan terrace, Paisley road, Ibrox, Glasgow, G. 28 Jan., 1896 M. 23 Nov., 1897

FLETT, GEORGE L., 5 Abercromby terrace, Ibrox, Glasgow, 22 Jan., 1895

FORRESTER, JOHN, 41 Bothwell street, Glasgow, 22 Dec., 1903

FORSYTH, LAWSON, 97 St. James road, Glasgow, 18 Dec., 1883

FOSTER, JAMES, 42 Herriet street, Pollokshields, Glasgow, 26 Jan., 1897

FRAME, JAMES, 6 Kilmailing terrace, Cathcart, Glasgow, 28 Feb., 1897

FRASER, J. IMBRIE, Clifton, Row, Dumbartonshire, G. 27 Apr., 1886 M. 27 Oct., 1903

FRYER, TOM J., "Brookdean," Hope, Sheffield, G. 18 Dec., 1894 M. 20 Dec., 1898

FUJII, TERUGORO, Imperial Japanese Navy, 8 Nottingham place, London, W. 21 Feb., 1899

FULLERTON, ALEXANDER, Vulcan Works, Paisley, 22 Dec., 1896

FULLERTON, JAMES, Abbotsburn, Paisley, 19 Mar., 1901

FULLERTON, ROBERT A., 1 Strathmore gardens, Hillhead, Glasgow, 19 Mar., 1901

FULTON, NORMAN O., 8 Moray Cottages, Scotstoun, Glasgow, G. 23 Feb., 1892 M. 19 Mar., 1901

FYFE, CHARLES F. A., 10 Wolseley street, Belfast, G. 18 Dec., 1894 M. 28 Apr., 1903

GALE, EDMUND WILLIAM, Drawing Office, Consolidated Gold Fields of South Africa, Box 1167, Johanneseburg, South Africa, 23 Nov., 1897

GALE, WILLIAM M., 18 Huntly gardens, Kelvinside, Glasgow, 24 Jan., 1893

GALLETLY, ARCHIBALD A., 10 Greenlaw avenue, Paisley, 22 Jan., 1901

GALLOWAY, CHARLES S., Greenwood City, Vancouver, B.C., 22 Jan., 1895

GARDNER, WALTER, 11 Kildonan terrace, Paisley road W., Glasgow, 20 Dec., 1898

GEARING, ERNEST, Fenshurst, Clarence drive, Harrogate, 20 Mar., 1888

GEMMELL, E. W., Board of Trade Offices, 7 York street, Glasgow, 18 Dec., 1888

GEMMELL, THOMAS, Electric Lighting Department, St. Enoch Station, Glasgow, 24 Oct., 1899

GIBB, ANDREW, Garthland, Westcombe Park road, Blackheath, London, S.E., G. 23 Dec., 1873 M. 21 Mar., 1882

GIFFORD, PATERSON, c/o Messrs Bell, Brothers & M'Lelland, 135 Buchanan street, Glasgow, 23 Nov., 1886

GILCHRIST, ARCHIBALD, 36 Finnieston street, Glasgow, 16 Dec., 1902

GILCHRIST, JAMES, 3 Kingsborough gardens, Kelvinside, Glasgow, G. 26 Dec., 1866 M. 29 Oct., 1878

GILL, WILLIAM NELSON, 11 Kersland street, Hillhead, Glasgow, 23 Feb., 1904

GILLESPIE, ANDREW, 65 Bath street, Glasgow, 20 Nov., 1894

GILLESPIE, JAMES, 21 Minerva street, Glasgow, G. 24 Feb., 1874 M. 24 Mar., 1891

GILLESPIE, JAMES, Jun., Margaretville, Orchard street, Motherwell, 18 Dec., 1900

GILMOUR, JOHN H., River Bank, Irvine, 20 Feb., 1900

GLASGOW, JAMES, Fernlea, Paisley, 25 Jan., 1898

†GOODWIN, GILBERT S., Alexandra buildings, James street, Liverpool, 28 Mar., 1866

GORDON, A. G., c/o Messrs Shewan, Tomes, & Co., Hong kong, China, 23 April, 1901

GORDON, JOHN, 152 Craigpark street, Glasgow, 26 Mar., 1895

GORRIE, JAMES M., 1 Broomhill terrace, Partick, Glasgow, 22 Nov., 1898

GOUDIE, ROBERT, 37 West Campbell street, Glasgow, 27 Oct., 1903

GOUDIE, WILLIAM J., B.Sc., 92 Albert drive, Crosshill, Glasgow, G. 21 Dec., 1897 M. 29 Oct., 1901

GOURLAY, H. GARRET, Dundee foundry, Dundee, 25 Apr., 1882

GOURLAY, R. CLELAND, Endyne, Oakshaw street, Paisley, G. 24 Dec., 1895 M. 27 Oct, 1903

GOVAN, ALEXANDER, The Sheiling, Craigendoran, 24 Oct., 1899

GOW, GEORGE, Aroka, Bellevue Road, Mount Eden, Auckland, New Zealand, 20 Mar., 1900

GOWAN, A. B., Byram, Maxwell drive, Pollokshields, Glasgow, G. 24 Jan., 1882 M. 22 Jan., 1895

GRACIE, ALEXANDER, Fairfield Shipbuilding and Engineering Company, Govan, G. 26 Feb., 1884 M. 24 Nov., 1896

GRAHAM, JOHN, 60 Cambridge drive, Kelvinside, Glasgow, 25 Jan., 1898

GRAHAM, JOHN, 25 Broomhill terrace, Partick, 23 Oct., 1900

GRAHAM, JOHN, 15 Armadale street, Dennistoun, Glasgow, G. 19 Mar., 1901 M. 21 Apr., 1903

GRAHAM, WALTER, Kilblain Engine works, Nicholson street, Greenock, G. 28 Jan., 1896 M. 15 June, 1898

GRANT, THOMAS M., 17 Clarence drive, Hyndland, Glasgow, 25 Jan., 1876

GRAY, DAVID, 77 West Nile street, Glasgow, 21 Nov., 1899

GRAY, JAMES, Riverside, Old Cumnock, Ayrshire, 8 Jan., 1862
GRAY, WILLIAM, 6 Lloyd's avenue, London, E.C., 26 Jan., 1904
GRETCHIN, G. L., Works Manager, Chantiers Navals Ateliers and Founderies de Nicolaieff, Nicolaieff, Russia, 25 Jan., 1898
GRIEVE, JOHN, Engineer, Motherwell, 25 Jan., 1898
GRIGG, JAMES, 135 Balshagray avenue, Partick, 20 Jan., 1903
GROVES, L. JOHN, Engineer, Crinan Canal house, Ardrishaig, 20 Dec., 1881
GUTHRIE, JOHN, The Crown Iron works, Glasgow, 27 Oct., 1896

HAIG, ROBERT, The Mechanical Retorts Co., Limited, Murray street, Paisley, 22 Jan., 1901
HAIGH, WILLIAM R., 6 Elmwood gardens, Jordanhill, 22 Dec., 1896
HALKET, JAMES P., Glengall Iron works, Millwall, London, E., 26 Oct., 1897
HALL, WILLIAM, Shipbuilder, Aberdeen, 25 Jan., 1881
HAMILTON, ARCHIBALD, Clyde Navigation Chambers, Glasgow, G. 24 Feb., 1874 M. 24 Nov., 1885
HAMILTON, CLAUD, 247 St. Vincent street, Glasgow, 15 June, 1898
HAMILTON, DAVID C., Clyde Shipping Company, 21 Carlton place, Glasgow, G. 23 Dec., 1873 M. 22 Nov., 1881
HAMILTON, JAMES, Messrs William Beardmore & Co., Govan, G. 26 Dec., 1863 M. 18 Mar., 1876
HAMILTON, JAMES, 6 Kyle park, Uddingston, 20 Nov., 1900
*†HAMILTON, JOHN, 22 Athole gardens, Glasgow,
HAMILTON, JOHN K., 230 Berkeley street, Glasgow, 15 May, 1900
HAMILTON, ROBERT SMITH, Flemington, Maxwell Park gardens, Pollokshields, Glasgow, 22 Mar., 1904
HARMAN, BRUCE, 35 Connaught road, Harlenden, London, N.W., G. 2 Nov., 1880 M. 22 Jan., 1884
HARRISON, J. E., 160 Hope street, Glasgow, G. 26 Feb., 1889 M. 22 Feb., 1898
HART, P. CAMPBELL, 134 St., Vincent street, Glasgow, 24 Nov., 1896
HARVEY, JAMES, 224 West street, Glasgow, 24 Jan., 1899
HARVEY, JOHN H., Messrs Wm. Hamilton & Co., Port-Glasgow, 22 Feb., 1887
HARVEY, THOMAS, Grangemouth Dockyard Co., Grangemouth, 19 Dec., 1899
HAY, JOHN, Wansfell, The Grove, Finchley, London, N., 26 Nov., 1901
HAY, RANKIN, 44 Windsor terrace, St. George's road, Glasgow, 18 Dec., 1900
HAYWARD, THOMAS ANDREW, 18 Carrington street, Glasgow, 22 Mar., 1898

†HENDERSON, A. P., 30 Lancefield quay, Glasgow, 25 Nov., 1879

HENDERSON, CHARLES A., The Basin House, Exeter, G 24 Jan., 1899; M. 27 Oct., 1903

HENDERSON, FREDERICK N., Meadowside, Partick, Glasgow, 26 Mar., 1895

HENDERSON, H. E., 32 Curzon road, Waterloo, near Liverpool, G. 22 Nov., 1898; M. 3 May, 1904

HENDERSON, J. BAILIE, Government Hydraulic Engineer, Brisbane, Queensland, 18 Dec., 1888

HENDERSON, JAMES BLACKLOCK, D.Sc., 146 Cambridge drive, Glasgow, 20 Nov., 1900

HENDERSON, JOHN FRANCIS, B.Sc., Albion Motor Car Co., Ltd., South street, Scotstoun, Glasgow, 16 Dec., 1902

†HENDERSON, JOHN L., 25 Nov., 1879

HENDERSON, ROBERT, 777 London road, Glasgow, 19 Mar., 1901

HENDERSON, WILLIAM STEWART, Belwood, Coatbridge, 24 Nov., 1896

HENDIN, ALEXANDER JAMES, 14 Hamilton terrace, W., Partick, Glasgow, 22 Dec., 1903

HENDRY, JAMES C., 8 Fleming terrace, George street, Shettleston, 18 Dec., 1900

HENRY, ERENTZ, 13 Ann street, Hillhead, Glasgow, 20 Feb., 1900

HERRIOT, W. SCOTT, 19 Keir street, Pollokshields, Glasgow, 28 Oct., 1890

HETHERINGTON, EDWARD P., Messrs John Hetherington & Co, Ltd., Pollard street, Manchester, 22 Nov., 1892

HIDE, WILLIAM SEYMOUR, Messrs Amos & Smith, Albert Dock works, Hull, 18 Dec., 1888

HILLHOUSE, PERCY ARCHIBALD, B.Sc., Whitworth, Busby, 3 May, 1904

HOGARTH, W. A., 293 Onslow drive, Glasgow, 20 Nov., 1900

HOGG, CHARLES P., 53 Bothwell street, Glasgow, 2 Nov., 1880

HOGG, JOHN, Victoria Engine works, Airdrie, 20 Mar., 1883

HÖK, W., 10 Karlaplan, Stockholm, Sweden, 29 Oct., 1901

HOLLIS, H. E., 40 Union street, Glasgow, A. 20 Nov., 1897; M. 24 Oct., 1899

HOLMES, F. G., Town Hall, Govan, 23 Mar., 1880

HOLMS, A. CAMPBELL, Lloyd's Register, 56 John street, Sunderland, 24 Apr., 1894

HOMAN, WILLIAM M'L., G. 26 Jan., 1892; M. 26 Oct., 1897

HOME, HENRY, Cambridge House, High street, Biggleswade, Bedfordshire, 23 Feb., 1897

HORNE, GEORGE S., Corozal, Iverton road, Johnstone, 21 Feb., 1899

HORNE, JOHN, Rokeby villa, Carlisle, 23 Nov., 1897

†HOUSTON, COLIN, Harbour Engine works, 60 Portman street, Glasgow, 25 Mar., 1890

HOUSTON, JAMES, Junr., Brisbane house, Bellahouston, 25 Jan., 1898

HOUSTON, WILLIAM CAMPBELL, B.Sc., Herriot Watt College, Edinburgh, G. 26 Oct., 1897 M. 3 Mar., 1903

HOWARD, JOHN ROWLAND, 56 Osborne road, Levenshulme, Manchester, 18 Dec., 1900

HOWAT, WILLIAM, 21 Kirkland street, Glasgow, 22 Feb., 1898

†HOWDEN, JAMES, 195 Scotland street, Glasgow, Original

HUBBARD, ROBERT SOWTER, Townsend Downey Shipbuilding Co., Shooter Island, Richmond, New York, 19 Dec., 1899

HUME, JAMES HOWDEN, 195 Scotland street, Glasgow, 22 Dec., 1891

HUMMEL, HORACE JAMES JORDAN, c/o Pintsch's Patent Lighting Co., 38 Leadenhall street, London, E.C., 23 April, 1901

*†HUNT, EDMUND, 121 West George street, Glasgow, Original

HUNTER, GILBERT M., Laurieston house, Selkirk, G. 26 Oct., 1886 M. 19 Nov., 1889

HUNTER, JAMES, Aberdeen Iron works, Aberdeen, 25 Jan., 1881

HUNTER, JAMES, 20 Feb., 1900

HUNTER, JOHN, 13 Queen's Gate, Dowanhill, Glasgow, A. 22 Jan., 1895 M. 21 Mar., 1899

HUNTER, JOSEPH GILBERT, P.O. Box 671, Newport News, Va., U.S.A., 24 Feb., 1891

HUNTER, JOSEPH M., Dalmuir place, 128 Muir street, Motherwell, 26 Nov., 1901

HUNTER, MATTHEW, Burnbank, Whiteinch, 19 Mar., 1901

†HUTCHEON, JAMES, 46 Park drive south, Whiteinch, 19 Mar., 1901

HUTCHESON, ARCHIBALD, 37 Mair street, Plantation, Glasgow, 22 Dec., 1896

HUTCHESON, JOHN, 37 Mair street, Plantation, Glasgow, 22 Mar., 1898

HUTCHISON, JAMES H., Shipbuilder, Port-Glasgow, 26 Mar., 1895

HUTCHISON, JOHN S., 107 Douglas street, Glasgow, 24 Apr., 1900

HUTCHISON, M., 50 Gibson street, Hillhead, Glasgow, 29 Oct., 1901

HUTSON, ALEXANDER, Westbourne house, Kelvinside, Glasgow, 19 Dec., 1899

HUTSON, GUYBON, Culdees, Minard road, Partickhill, Glasgow, 21 Mar., 1893

HUTSON, JAMES, 117 Balshagray avenue, Partick, 19 Dec., 1899

HYND, ALEXANDER, Federal Supply and Cold Storage Co., of South Africa, Ltd., Durban, South Africa, 27 Oct., 1903

†INGLIS, JOHN, LL.D., Point House Shipyard, Glasgow, 1 May, 1861

INGLIS, JOHN FRANCIS, 46 Princes terrace, Dowanhill, Glasgow, G. 26 Oct., 1897 M. 20 Jan., 1903

INNES, W., 11 Walmer terrace, Glasgow, G. 22 Feb., 1898 M. 27 Oct., 1903

IRELAND, WILLIAM, 7 Ardgowan terrace, Glasgow, 25 Feb., 1890

JACK, ALEXANDER, 164 Windmillhill, Motherwell, 21 Nov., 1893

JACK, JAMES R., Mavisbank Dumbarton, 27 Apr., 1897

JACKSON, DANIEL, Thornbank, Dumbarton, 24 Oct., 1899

JACKSON, HAROLD D., Westdel, Dowanhill, Glasgow, G. 24 Mar., 1891 M. 20 Dec., 1898

JACKSON, WILLIAM, Govan Engine works, Govan, 21 Dec., 1875

JACKSON, WILLIAM STENHOUSE, 109 Hope street, Glasgow, G. 29 Oct., 1901 M. 23 Feb., 1904

JAMIESON, Professor ANDREW, F.R.S.E., 16 Rosslyn terrace, Kelvinside, Glasgow, 26 Mar., 1889

JEFF, WILLIAM, Northfleet Engineering works, Northfleet, Kent, 18 Dec., 1900

JEFFERY, ARTHUR W., 71 Dixon avenue, Glasgow, 23 April, 1901

JOHNSTON, DAVID, 9 Osborne terrace, Copland road, Glasgow, 25 Feb., 1879

JOHNSTON, ROBERT, Kirklee, Wallace street, Kilmarnock, 22 Mar., 1898

JOHNSTONE, GEORGE, F.R.S.E., Marine Superintendent, British India Steam Navigation Co., Ltd., 16 Strand road, Calcutta, India, 21 Mar., 1899

JONES, ARTHUR J. E., 118 Napiershall street, Glasgow, 29 Oct., 1901

JONES, LLEWELLYN, The Stirling Boiler Co., Ltd., 25 Victoria street, Westminster, London, 25 Oct., 1892

JUDD, EDWIN H., Sentinel works, Glasgow, G. 20 Dec., 1898 M. 26 Nov., 1901

KAY, ALEXANDER J., 21 Endsleigh gardens, Partickhill, Glasgow, G. 24 Oct., 1893 M. 28 Apr., 1903

KEEGAN, THOMAS J. M., P. O. Box 4585, Johannesburg, South Africa, 22 Jan., 1901

KEELING, THOMAS, 42 Prospecthill road, Langside, Glasgow, 19 Feb., 1901

KELLY, ALEXANDER, 100 Hyde Park street, Glasgow, 28 Feb., 1897

KELSO, MATTHEW GLEN, 47 Oxford street, Glasgow, 27 Oct., 1903

KEMP, DANIEL, 48 Randolph gardens, Partick, Glasgow, G. 23 Nov., 1886 M. 20 Dec., 1898

KEMP, EBENEZER, D., Birkenhead Iron works, Birkenhead, G. 20 Feb., 1883 M. 25 Oct., 1892

KEMPT, IRVINE, Jun., 37 Falkland mansions, Hyndland, Glasgow, G. 26 Feb., 1895 M 27 Apr., 1897

KENNEDY, ALEXANDER M'A., Clydevale, Dumbarton, 30 Apr., 1895

KENNEDY, JOHN, Messrs R. M'Andrew & Co., Suffolk House, Laurence Pountney Hill, London, E.C., 23 Jan., 1877

KENNEDY, RANKIN, Bute villa, Springboig, Shettleston, 3 May, 1904
KENNEDY, ROBERT, B.Sc., Messrs Glenfield & Kennedy, Kilmarnock, 23 Mar., 1897
KENNEDY, THOMAS, Messrs Glenfield & Kennedy, Kilmarnock, 22 Feb., 1876
KENNEDY, WILLIAM, 13 Victoria crescent, Dowanhill, Glasgow, 24 Apr., 1894
KER, WILLIAM ARTHUR, Manager, Patella Works, Paisley, 16 Dec., 1902
KERR, JAMES, Lloyd's Register of Shipping, Hull, 22 Feb., 1898
KERR, JOHN, 10 Wellmeadow, Blairgowrie, 22 Mar., 1904
KEY, WILLIAM, 109 Hope street, Glasgow, 20 Feb., 1900
KINCAID, JOHN G., 30 Forsyth street, Greenock, 22 Feb., 1898
KING, A. C., Motherwell Bridge Co., Motherwell, 24 Jan., 1899
KING, J. FOSTER, The British Corporation, 121 St. Vincent street, Glasgow, 26 Mar., 1895
KINGHORN, A. J., 59 Robertson street, Glasgow, 24 Oct., 1899
KINGHORN, JOHN G., Tower Buildings, Water street, Liverpool, 23 Dec., 1879
KINMONT, DAVID W., Contractor's Office, Larkhall, G. 20 Feb., 1894 M. 19 Mar., 1901
†KIRBY, FRANK E., Detroit, U.S.A., 24 Nov., 1885
KLINKENBERG, JOHN, 4 Derby street, Glasgow, 16 Dec., 1902
KNIGHT, CHARLES A., c/o Messrs Babcock & Wilcox, Ltd., Oriel House, Farringdon st., London, E.C., 27 Jan., 1885
KNOX, ROBERT, 10 Clayton terrace, Dennistoun, Glasgow, 24 Nov., 1896

LACKIE, WILLIAM W., 75 Waterloo street, Glasgow, 22 Nov., 1898
LADE, JAMES A., Shalott, Kilmalcolm, 27 Jan., 1891
LAIDLAW, D., 147 East Milton street, Glasgow, 18 Mar., 1902
LAIDLAW, JOHN, 98 Dundas street, s.s., Glasgow, 25 Mar., 1884
LAIDLAW, ROBERT, 147 East Milton street, Glasgow, 26 Nov., 1862
LAIDLAW, T. K., 147 East Milton street, Glasgow, 18 Mar., 1902
LAIDLAW, THOMAS, 52 Norse road, Scotstoun, 26 Nov., 1901
LAING, ANDREW, The Wallsend Slipway Company, Newcastle-on-Tyne, 20 Mar., 1880
LAIRD, ANDREW, 190 West George Street, Glasgow, 22 Nov., 1898
LAMBERT, JOHN, Corporation Electricity Works, Perth, 18 Dec., 1900
LAMBERTON, ANDREW, Sunnyside Engine works, Coatbridge, 27 Apr., 1897
LAMBIE, ALEXANDER, Ravenshall, Port-Glasgow, 19 Mar., 1901
LANG, C. R., Holm Foundry, Cathcart, Glasgow, G. 20 Nov., 1888 M. 26 Nov., 1895

LANG, JAMES, Messrs George Smith & Sons, 75 Bothwell street, Glasgow, 24 Feb., 1880

LANG, JOHN, Jun., Lynnhurst, Johnstone, 26 Feb., 1884

LANG, ROBERT, Quarrypark, Johnstone, 25 Jan., 1898

LAUDER, THOMAS H., 38 Chappel terrace, Parkhead, Glasgow, G. 19 Dec., 1893 M. 27 Oct., 1903

LAURENCE, GEORGE B., Clutha Iron works, Paisley road, Glasgow, 21 Feb., 1888

LE ROSSIGNOL, A. E., Corporation Tramway Office, City road, Newcastle-on-Tyne, 22 Nov., 1898

†LEE, ROBERT, 105 Clarence drive, Partickhill, Glasgow, G. 21 Dec., 1888 M. 22 Mar., 1898

LEITCH, ARCHIBALD, 40 St. Enoch square, Glasgow, 22 Dec., 1896

LEMKES, C. R. L., 5 Wellington street, Glasgow, A. 26 Feb., 1888 M. 22 Mar., 1894

LENNOX, ALEXANDER, 34 Glasgow street, Hillhead, Glasgow, G. 23 Jan., 1894 M. 19 Mar., 1901

LESLIE, JAMES T. G., 148 Randolph terrace, Hill street, Garnethill, Glasgow, 25 Apr., 1893

LESLIE, JOHN, Struan, Victoria drive, Scotstounhill, Glasgow, G. 20 Dec., 1892 M. 27 Oct., 1903

LESLIE, WILLIAM, Viewmount, Emerald Hill terrace, Perth, West Australia, 24 Feb., 1891

LESTER, WILLIAM R., 11 West Regent street, Glasgow, G. 21 Nov., 1883 M. 24 Jan., 1899

LEWIN, HARRY W., 154 West Regent street, Glasgow, 20 Dec., 1898

†LINDSAY, CHARLES C., 180 Hope street, Glasgow, G. 23 Dec., 1873 M. 24 Oct., 1876

LINDSAY, W. F., 203 Nithsdale road, Pollokshields, Glasgow, 19 Mar., 1901

LITHGOW, WILLIAM T., Port-Glasgow, 21 Feb., 1893

LIVESEY, ROBERT M., c/o Messrs Topham Jones & Railton, H.M. Dockyard Extension, Gibraltar, 26 Jan., 1897

†LOBNITZ, FRED., Clarence house, Renfrew, G. 24 Mar., 1885 M. 20 Nov., 1896

LOCKIE, JOHN, Wh.Sc., 2 Custom House Chambers, Leith, 26 Jan., 1897

LONGBOTTOM, Professor JOHN GORDON, Technical College, 38 Bath street, Glasgow, 22 Nov., 1898

LORIMER, ALEXANDER SMITH, Kirklinton, Langside, Glasgow, G. 21 Nov., 1899 M. 27 Oct., 1903

LORIMER, HENRY DÜBS, Kirklinton, Langside, Glasgow, G. 21 Nov., 1899 M. 3 May, 1904

†LORIMER, WILLIAM, Glasgow Locomotive works, Gushetfaulds, Glasgow, 27 Oct., 1896

†LOUDON, GEORGE FINDLAY, 10 Claremont Terrace, Glasgow, 25 Jan., 1896

LOWSON, JAMES, 10 West Campbell street, Glasgow, 27 Oct., 1903

LUKE, W. J., Messrs John Brown & Co., Ltd., Clydebank, 24 Jan., 1898
LUSK, HUGH D., c/o Mrs Nelson, Larch villa, Annan, 21 Feb., 1880
LYALL, JOHN, 33 Randolph gardens, Partick, 27 Oct., 1888

MACALPINE, JOHN H., 700 Van Buren street, Wilmington, Del., U.S.A., 20 Dec., 1898
M'ARTHUR, JAMES D., Oriental avenue, Bangkok, Siam, 26 Apr., 1898
MCAULAY, W., 10 Dixon street, Glasgow, 22 Nov., 1898
†M'CALL, DAVID, 160 Hope street, Glasgow, 17 Feb., 1858
MACCALLUM, P. F., 93 Hope street, Glasgow, G. 22 Nov., 1880; M. 27 Oct., 1903
MCCALLUM, DAVID BROADFOOT, Aldersyde, Radyr, near Cardiff, 23 Feb., 1904
M'COLL, PETER, 197 Byars road, Partick, G. 18 Dec., 1883; M. 24 Jan., 1899
†MACCOLL, HECTOR, Bloomfield, Belfast, 24 Mar., 1874
†MACCOLL, HUGO, Wreath Quay Engineering works, Sunderland, G. 20 Dec., 1881; M. 22 Oct., 1889
M'CREATH, JAMES, 208 St. Vincent street, Glasgow, 23 Oct., 1883
MACDONALD, D. H., Brandon works, Motherwell, 24 Mar., 1896
MACDONALD, JOHN, Bridge Turbine Works, Pollokshaws, Glasgow, 21 Mar., 1899
MACDONALD, JOHN DRON, 3 Rosemount terrace, Ibrox, Glasgow, 19 Mar., 1901
MACDONALD, ROBERT COWAN, Merrylee, Trefoil avenue, Shawlands, Glasgow, G. 21 Nov., 1899; M. 28 Apr., 1903
MACDONALD, THOMAS, 9 York street, Glasgow, 25 Jan., 1898
MACDONALD, WILLIAM, 48 Dalhousie street, Glasgow, 22 Dec., 1903
MCDOUGALL, ROBERT MELVIN, 86 Dale street, Glasgow, 20 Nov., 1900
M'DOWALL, JOHN JAS., Vulcan Engine Works, Piraeus, Greece, 29 Oct., 1901
M'EWAN, JAMES, Cyclops Foundry Co., Whiteinch, Glasgow, 26 Feb., 1884
M'EWAN, JOSEPH, 35 Houldsworth street, Glasgow, 27 Jan., 1891
MACFARLANE, DUNCAN, Jun., 58 Hydepark street, Glasgow, G. 26 Oct., 1897; M. 27 Oct., 1903
MACFARLANE, JAMES, Annieslea, Motherwell, 15 June, 1898
MACFARLANE, JAMES W., 12 Balmoral villas, Cathcart, Glasgow, 2 Nov., 1880
†MACFARLANE, WALTER, 22 Park Circus, Glasgow, 26 Oct., 1886
M'FARLANE, GEORGE, 34 West George street, Glasgow, G. 24 Feb., 1874; M. 24 Nov., 1885
MACFEE, JOHN, Castle Chambers, Renfield street, Glasgow, 22 Jan., 1901
M'GEE, DAVID, c/o Messrs John Brown & Co., Clydebank, 22 Dec., 1896
†M'GEE, WALTER, Stoney brae, Paisley, 25 Jan., 1898

M'GEOCH, DAVID BOYD, Lilybank, Port-Glasgow, 28 Jan., 1896

M'GIBBON, W. C., 2 Carlton Court, Bridge street, Glasgow, 18 Dec., 1900

MACGREGOR, J. GRANT, c/o L. & N. Railway Co., 10th Broadway, Louisville, Ky., U.S.A., G. 21 Dec., 1886; M. 28 Apr., 1891

M'GREGOR, JOHN B., 6 Oxford terrace, Renfrew, G 18 Dec., 1883; M. 27 Apr., 1897

M'GREGOR, THOMAS, 10 Mosesfield terrace, Springburn, Glasgow, 26 Jan., 1886

M'HOUL, JOHN B., 2 Windsor terrace, Langside, Glasgow, G 24 Jan., 1899; M. 27 Oct., 1903

M'ILVENNA, JOHN, 13 Caird drive, Partickhill, Glasgow, 19 Mar., 1901

MACILWAINE, GEORGE W., 34 White street, Partick, 18 Mar., 1902

M'INDOE, JOHN B., 2 Park terrace, Underwood, Paisley, 21 Mar., 1899

MCINTOSH, THOMAS WILLIAM, 58 Hydepark street, Glasgow 24 Nov., 1903

M'INTOSH, DONALD, Dunglass, Bowling, 20 Feb., 1894

M'INTOSH, JOHN, 5 Douglas terrace, Paisley, G. 22 Jan., 1895; M. 27 Oct., 1903

M'INTOSH, JOHN F., Caledonian Railway, St. Rollox, Glasgow, 28 Jan., 1896

MACKINTOSH, JOHN, 2 Buchanan terrace, Paisley, G. 18 Dec., 1894; M. 28 Apr., 1903

MACKAY, HENRY JAMES, 39 Westbank terrace, Gibson street, Glasgow, 18 Feb., 1902

MACKAY, ROBERT, 7 Leslie street, Pollokshields, Glasgow, 23 Jan., 1900

M'KEAND, ALLAN, 3 St. James street, Hillhead, Glasgow, G. 19 Dec., 1884; M. 20 Mar., 1892

MACKECHNIE, JOHN, 342 Argyle street, Glasgow, 20 Dec., 1898

M'KECHNIE, JAMES, Messrs Vickers, Sons, & Maxim, Barrow-in-Furness, 24 Apr., 1888

MACKENZIE, JAMES, 8 St. Alban's road, Bootle, G. 25 Oct., 1881; M. 24 Jan., 1899

MACKENZIE, THOMAS B., Calder view, Motherwell, G. 23 Jan., 1885; M. 26 Nov., 1893

M'KENZIE, JOHN, Messrs J. Gardiner & Co., 24 St. Vincent place, Glasgow, 25 Apr., 1893

M'KENZIE, JOHN, Speedwell Engineering works, Coatbridge, 25 Jan., 1898

MACKIE, WILLIAM, 3 Park terrace, Govan, G. 21 Dec., 1897; M. 24 Mar., 1903

MACKIE, WILLIAM A., Falkland bank, Partickhill, Glasgow, 22 Mar., 1881

MCKIE, J. A., Copland works, Govan, 25 Jan., 1898

†MACKINLAY, JAMES T. C., 110 Gt Wellington street, Kinning park, Glasgow, 27 Oct., 1896

M'KINNEL, WILLIAM, 234 Nithsdale road, Pollokshields, Glasgow, A. 21 Feb., 1893 M. 22 Feb., 1898

M'LACHLAN, EWEN, 168 Kenmure street, Pollokshields, Glasgow, 21 Feb., 1899

MCLACHLAN, JOHN, Saucel Bank House, Paisley, 26 Oct., 1897

MACLAREN, JOHN F., B.Sc., Eglinton foundry, Canal street, Glasgow, 23 Feb., 1892

MACLAREN, ROBERT, Eglinton foundry, Canal street, Glasgow, G. 2 Nov., 1880 M. 22 Dec., 1885

MCLAREN, JOHN ALEXANDER, 10 Dixon street, Glasgow, 22 Nov., 1898

MCLAREN, RICHARD ANDREW, South Gallowhill house, Paisley, 21 Apr., 1903

MCLAREN, WILLIAM, 9 Westbank quadrant, Hillhead, Glasgow, 26 Nov., 1901

MCLAURIN, DUNCAN, 217 Mercer street, New York, U.S.A., 23 Oct., 1900

MACLAY, DAVID M., Dunourne, Douglas street, Motherwell, 18 Dec., 1900

†MACLEAN, ANDREW, Messrs Barclay, Curle & Co., Whiteinch, 3 May, 1904

MACLEAN, Prof. MAGNUS, M.A., D.Sc., 51 Kersland street, Hillhead, Glasgow, 21 Nov., 1899

MACLEAN, WILLIAM DICK, Nuevas Hilaturas del Ter, Torello, Catalufia, Spain, 25 Jan., 1898

MCLEAN, JOHN, Messrs Weir & McLean, 45 Hope street, Glasgow, 16 Dec., 1902

MCLEAN, JOHN, Lower Barraca, Valetta, Malta, G. 21 Nov., 1899 M. 22 Dec., 1903

†MACLELLAN, WILLIAM T., Clutha Iron works, Glasgow, 21 Dec., 1886

MCLELLAN, ALEX., Clyde Navigation Trust, 16 Robertson street, Glasgow, G. 18 Dec., 1900 A.M. 18 Ap., 1903 M. 27 Oct., 1903

MCLELLAN, DUGALD, Caledonian Railway Co., Goods Yard, Buchanan street, Station, Glasgow, 22 Jan., 1901

MACMILLAN, HUGH MILLAR, B.Sc., Messrs. Wigham, Richardson, & Co., Newcastle-on-Tyne, 18 Dec., 1900

*†MACMILLAN, WILLIAM, Holmwood, Whittingehame drive, Kelvinside, Glasgow, Mar., 1863

M'MILLAN, JOHN, Resident Electrical Engineer's Office, Falkirk, G. 27 Jan., 1885 M. 24 Jan., 1899

M'MILLAN, W. MACLEOD, Dockyard, Dumbarton, 22 Jan., 1901

MACMURRAY, WILLIAM, Taller Bisayas, Yloilo, Philippine Islands, 18 Mar., 1902

MCMURRAY, THOMAS H., 22 Cliftonville avenue, Belfast, 22 Jan., 1901

M'NAIR, JAMES, Norwood, Prestwick road, Ayr, 26 Nov., 1895

MACNAMARA, JOSEPH, Wortley, near Sheffield, 20 Jan., 1903

M'NEIL, JOHN, Helen street, Govan, 23 Dec., 1884

MACNICOLL, NICOL, 6 Dixon street, Glasgow, 19 Mar., 1901

MACOUAT, R. B., Victoria Bolt and Rivet works, Cranstonhill, Glasgow, 21 Mar., 1899

M'WHIRTER, WILLIAM, 214 Holm street, Glasgow, 24 Mar., 1891

MACK, JAMES, 22 Rutland street, Edinburgh, G. 21 Dec., 1886 M. 20 Dec., 1898

MAITLAND, CREE, 190 West George street, Glasgow, 21 Apr., 1903

MANSON, JAMES, G. & S. W. Railway, Kilmarnock, 21 Feb., 1899

MARRIOTT, REUBEN, Plantation Boiler Works, Govan, 23 Feb., 1897

MARSHALL, DAVID, Glasgow Tube works, Glasgow, 22 Jan., 1895

MARSHALL, JOHN, Ashgrove, Kilwinning, 18 Dec., 1900

MARTIN, WILLIAM CRAMMOND, 10 West Campbell street, Glasgow, 27 Oct., 1903

MATHESON, DONALD A., Caledonian Railway Co., Buchanan street Station, Glasgow, 26 Jan., 1897

MATHEWSON, GEORGE, Bothwell works, Dunfermline, 21 Dec., 1875

MATHIESON, JAMES H., Saracen Tool Works, Glasgow, 29 Oct., 1901

MATTHEY, C. A., c/o W. Hope Campbell, Esq., 42 Krestchatik, Kieff, S. Russia, 26 Oct., 1897

MAVOR, HENRY A., 47 King street, Bridgeton, Glasgow, 22 Apr., 1884

MAVOR, SAM, 37 Burnbank gardens, Glasgow, 20 Nov., 1894

MAXTON, JAMES, 4 Ulster street, Belfast, 22 Jan., 1901

MAY, WILLIAM W., Woodbourne, Minard avenue, Partickhill, Glasgow, 25 Jan., 1876

MAYER, WILLIAM, Morwell House, Dumbarton, 23 Feb., 1897

MECHAN, HENRY, Messrs Mechan & Sons, Scotstounlron works, Glasgow, 25 Jan., 1887

MECHAN, SAMUEL, 7 Kelvingrove terrace, Glasgow, 27 Oct., 1891

MELVILLE, WILLIAM, Glasgow and South Western Railway, St. Enoch square, Glasgow, 23 Jan., 1883

MIDDLETON, R. A., 20 The Grove, Benton, near Newcastle-on-Tyne, G. 24 Jan., 1882 M. 28 Oct., 1890

MILLAR, SIDNEY, Harthill house, Cambuslang, G. 26 Feb., 1889 M. 21 Dec., 1897

MILLAR, THOMAS, Sir W. G. Armstrong, Whitworth & Co., Ltd., Walker Shipyard, Newcastle-on-Tyne, G. 25 Nov., 1884 M. 27 Oct., 1903

MILLAR, WILLIAM, Towersland, Octavia terrace, Greenock, 19 Dec., 1899

MILLER, ARTHUR C., 12 Caird drive, Partickhill, Glasgow, 19 Mar., 1901

MILLER, JOHN F., Greenoakhill, Broomhouse, G. 23 Dec., 1873 M. 22 Nov., 1881

MILLER, ROBERT F., Messrs Wardlaw & Miller, 109 Bath street, Glasgow, G. 25 Feb., 1890 M. 27 Oct., 1903

MILNE, CHARLES W., Fairmount, Scotstounhill, Glasgow, 26 Nov., 1901

MILNE, GEORGE, 10 Bothwell street, Glasgow, 22 Jan., 1901

MITCHELL, ALEXANDER, Hayfield house, Springburn, Glasgow, 26 Jan., 1886

MITCHELL, GEORGE A., F.R.S.E., 5 West Regent street, Glasgow, 25 Jan., 1898

MITCHELL, THOMAS, Gower street, Bellahouston, Glasgow, 20 Nov., 1888

MOIR, ERNEST W., c/o Messrs S. Pearson & Son. 10 Victoria street, Westminster, London, G. 25 Jan., 1881; M. 24 Jan., 1899

MOIR, JAMES, 70 Wellington street, Glasgow, 16 Dec., 1902

MOIR, JOHN, Clyde Shipbuilding and Engineering Company, Port-Glasgow, 23 Feb., 1897

MOIR, THOMAS, 10 Syriam terrace, Springburn, Glasgow, 23 Apr., 1901

MOLLISON, HECTOR A., B.Sc., 30 Balshagray avenue, Partick, G. 22 Nov., 1892; M. 20 Nov., 1900

MOLLISON, JAMES, 30 Balshagray avenue, Partick, 21 Mar., 1876

MONROE, ROBERT, Eastbrook house, Dinas Powis, Glam., 26 Jan., 1904

MOORE, RALPH D., B.Sc., Leabank, Bearsden, 27 Apr., 1897

MOORE, ROBERT H., Caledonian Steel Castings Co., Govan, 16 Dec., 1902

MOORE, ROBERT T., B.Sc., 13 Clairmont gardens, Glasgow, 27 Jan., 1891

MORGAN, ROBERT, Arnsbrae, Dumbreck, Glasgow, 24 Mar., 1903

MORISON, WILLIAM, 50 St. Vincent crescent, Glasgow, 20 Mar., 1888

MORISON, WILLIAM B., 7 Rowallan gardens, Broomhill, Glasgow, 20 Nov., 1900

MORRICE, RICHARD WOOD, 24 Battlefield road, Langside, Glasgow, 28 Feb., 1897

MORRISON, ARTHUR MACKIE, Merchiston, Scotstounhill, Glasgow, W., G. 17 Dec., 1889; M. 8 Mar., 1903

MORRISON, WILLIAM, 11 Sherbrooke avenue, Pollokshields, Glasgow, 19 Feb., 1901

MORT, ARTHUR, Calder view, Motherwell, G. 26 Jan., 1897; M. 19 Dec., 1899

MORTON, DAVID HOME, 130 Bath street, Glasgow, 20 Nov., 1900

MORTON, DUNCAN A., Errol works, Errol, 21 Nov., 1899

MORTON, ROBERT, 8 Prince's square, Buchanan street, Glasgow, G. 17 Dec., 1878; M. 23 Jan., 1883

MORTON, ROBERT C., 16 Vinicombe street, Hillhead, Glasgow, 26 Nov., 1901

MORTON, THOMAS, M. G., Errol works, Errol, 26 Jan., 1904

MOTION, ROBERT, Ancrum, Lenzie, 23 Feb., 1892

MOTT, EDMUND, 88 Connaught Road, Roath, Cardiff, 24 Mar., 1885

MOWAT, MAGNUS, Jun., Civil Engineer, Millwall Docks, London, G. 26 Oct., 1897; M. 26 Nov., 1901

MOYES, JOHN YOUNG, 12 Ruthven street, Glasgow, 27 Oct., 1902

†MUIR, HUGH, 7 Kelvingrove terrace, Glasgow, 17 Feb., 1884

MUIR, JAMES E., 45 West Nile street, Glasgow, 22 Dec., 1896

†MUIR, JOHN G., 24 Jan., 1882

MUIR, PETER GILLESPIE, 24 Laburnum avenue, Wallsend-on-Tyne, 18 Mar., 1902

MUIR, ROBERT WHITE, 97 St. James road, Glasgow, 21 Dec., 1897

MUIRHEAD, JAMES A., Messrs A. L., Secretan & Co., Ltd., 3 Victoria street, Westminster, London, S.W., 19 Feb., 1901

MUMME, CARL, 30 Newark street, Greenock, 22 Oct., 1895

MUMME, ERNEST CHARLES, Hajipur-Begam Sarai Railway Extension, Begam Sarai P.O., Tirhoot State Railway, India, G. 22 Nov., 1892 M. 20 Feb., 1900

MUNN, ROBERT A., Twynham, 5 Winn road Southampton, 22 Dec., 1896

MUNRO, JAMES, 34 Garthland drive, Glasgow, 16 Dec., 1902

MUNRO, JOHN, 51 Polwarth gardens, Hyndland, Glasgow, 23 Apr., 1901

MUNRO, ROBERT D., Scottish Boiler Insurance Company, 111 Union street, Glasgow, 19 Dec., 1882

MURDOCH, FREDERICK TEED, Nile House, Mansourah, Egypt, 25 Feb., 1896

MURDOCH, J. A., 7 Park Circus place, Glasgow, G. 25 Oct., 1892 M. 20 Nov., 1900

MURPHY, B. STEWART, Lloyd's Register, 324-6, Third Floor, Bourse Buildings, Philadelphia, U.S.A., G. 24 Oct., 1893 M. 20 Nov., 1900

MURRAY, ANGUS, Strathroy, Dumbreck, G. 14 May, 1878 M. 19 Nov., 1889

MURRAY, HENRY, Shipbuilder, Port-Glasgow, 22 Dec., 1896

MURRAY, JAMES, Rossbank, Port-Glasgow, 22 Dec., 1896

MURRAY, JAMES, Messrs Murray MacVinnie & Co., Mavisbank quay, S.S., Glasgow, 26 Jan., 1886

MURRAY, RICHARD, 109 Hope street, Glasgow, 26 Oct., 1897

MURRAY, THOMAS BLACKWOOD, B.Sc., 92 Camperdown road, Scotstoun, Glasgow, 22 Dec., 1891

MURRAY, THOMAS R., Messrs. Spencer & Co., Melksham, Wilts, 25 Feb., 1896

MYLES, DAVID, Northumberland Engine works, Wallsend-on-Tyne, G. 20 Dec., 1887 M. 19 Dec., 1899

MYLNE, ALFRED, 108a Hope street, Glasgow, G. 26 Jan., 1897 M. 24 Mar., 1903

NAGAO, HANPEI, c/o Taipeifu, Formosa, Japan, 24 Dec., 1901

NAPIER, HENRY M., Shipbuilder, Yoker, near Glasgow, 25 Jan., 1881

†NAPIER, ROBERT T., 75 Bothwell street, Glasgow, 20 Dec., 1881

NEEDHAM, JAMES H., Colquhoun street, Dumbarton, 18 Mar., 1902

NEILL, HUGH, Jun., 99 Clarence drive, Hyndland, Glasgow, G. 21 Nov., 1899 M. 3 May, 1904

NEILSON, JAMES, Alma Boiler Works, Glasgow, 24 Mar., 1903

NELSON, ANDREW S., Snowdon, Sherbrooke avenue, Pollokshields, Glasgow, 27 Oct., 1896

NIELSON, JOHN FREDERICK, Messrs John Brown & Co., Ltd., Clydebank, 24 Nov., 1903

NESS, GEORGE, 111 Union street, Glasgow, 23 Feb., 1897

NICOL, R. GORDON, 15 Regent Quay, Aberdeen, 20 Nov., 1900

†NORMAN, JOHN, 131a St. Vincent street, Glasgow, 11 Dec., 1861

NORRIS, CHARLES G., 504 Stockport road, Manchester, 29 Oct., 1901

O'NEILL, J. J., 19 Roxburgh street, Kelvinside, Glasgow, 24 Nov., 1896

OLDFIELD, GEORGE, c/o Messrs Crarer Bros., Vauxhall works, Osborne street, Manchester, 22 Nov., 1898

OLIPHANT, WILLIAM, 207 Bath street, Glasgow, 23 Feb., 1897

†ORMISTON, JOHN W., 213 St. Vincent street, Glasgow, 28 Nov., 1860

ORR, ALEXANDER T., Marine Department, London and North-Western Railway, Holyhead, 24 Mar., 1883

ORR, JOHN R., Motherwell Bridge Co., Motherwell, 24 Jan., 1899

OSBORNE, HUGH, 31 Broomhill terrace, Partick, G. 22 Dec., 1891 M. 27 Oct., 1903

PARKER, EDWARD HENRY, 11 Strathmore gardens, Hillhead, Glasgow, 16 Dec., 1902

PARSONS, The Hon. CHARLES ALGERNON, M.A., Holeyn Hall, Wylam-on-Tyne, 28 Apr., 1903

PATERSON, JAMES V., 307 Walnut street, Philadelphia, U.S.A., G. 24 Jan., 1888 M. 27 Oct., 1903

PATERSON, JOHN, Edradour, Dalmuir, 22 Jan., 1901

PATERSON, W. L. C., 5 Elmwood terrace, Jordanhill, Glasgow, 21 Nov., 1883

PATON, Professor GEORGE, Royal Agricultural College, Cirencester, 22 Nov., 1887

PATRICK, ANDREW CRAWFORD, Johnstone, 25 Jan., 1898

PATTERSON, JAMES, Maryhill Iron works, Glasgow, 22 Nov., 1898

PATTERSON, JAMES, 130 Elliot street, Glasgow, 18 Dec., 1900

PATTIE, ALEXANDER W., Hong Kong & Whampoa Dock Co., Hong Kong, 22 Jan., 1895

PAUL, H. S., Levenford works, Dumbarton, 24 Jan., 1899

PAUL, JAMES, Kirkton, Dumbarton, 24 Mar., 1903

PAUL, MATTHEW, Levenford works, Dumbarton, G. 26 Feb., 1884 M. 21 Dec., 1886

PEACOCK, JAMES, Oriental Steam Navigation Co., 13 Fenchurch avenue, London, E.C. — G. 22 Nov., 1881; M. 21 Feb., 1899

PECK, EDWARD C., Messrs Yarrow & Company, Poplar, London, — G. 23 Dec., 1873; M. 23 Oct., 1888

PECK, JAMES J., 82 Randolph gardens, Broomhill, Glasgow, — 22 Dec., 1896

PECK, NOEL E., 4 Ashgrove terrace, Partickhill road, Glasgow, — 18 Dec., 1900

PENMAN, ROBERT REID, 16 Annfield place, Glasgow, — 25 Jan., 1898

PENMAN, WILLIAM, Springfield house, Dalmarnock, Glasgow, — 25 Jan., 1898

PETROFF, ALEXANDER, 60 Thornton avenue, Streatham Hill, London, S.W., — 19 Mar., 1901

PHILIP, WILLIAM LITTLEJOHN, Sherbrooke, Box, Wilts, — 24 Jan., 1899

PICKERING, JONATHAN, 50 Wellington street, Glasgow, — 3 Mar., 1903

POCOCK, J. HERBERT, 39 Falkland mansions, Kelvinside, Glasgow, — 29 Oct., 1901

POLLOCK, DAVID, 128 Hope street, Glasgow, — 23 Feb., 1897

POLLOK, ROBERT, Messrs John Brown & Co., Clydebank, — 22 Dec., 1896

POOLE, WILLIAM JOHN, 65 Renfield street, Glasgow, — 20 Dec., 1898

POPE, ROBERT BAND, Leven Shipyard, Dumbarton, — 25 Oct., 1887

PRATTEN, WILLIAM J., Mornington, Derryvolgie avenue, Belfast, — 22 Dec., 1896

PRINGLE, WILLIAM S., 15 Elm place, Aberdeen, — G. 24 Oct., 1893; M. 16 Dec., 1902

PURDON, ARCHIBALD, Inch works, Port-Glasgow, — 27 Apr., 1897

PURVES, J. A., D.Sc., F.R.S.E., 53 York place, Edinburgh, — 25 Oct., 1898

PURVIS, Prof. F. P., College of Naval Architecture, Imperial University, Tokio, Japan, — 20 Nov., 1877

PUTNAM, THOMAS, Darlington Forge Co., Darlington, — 15 June, 1898

PYLE, JAMES H., 38 Elliot street, Glasgow, — 23 Feb., 1897

RAEBURN, CHARLES E., 1 Hillhead street, W., Glasgow, — 24 Oct., 1899

RAINEY, FRANCIS E., c/o Mr F. Nell, 97 Queen Victoria street, London, S.E., — 27 Apr., 1897

RAIT, HENRY M., 155 Fenchurch street, London, — 23 Dec., 1868

RAMAGE, RICHARD, Shipbuilder, Leith, — 22 Apr., 1873

RANKIN, JOHN F., Eagle foundry, Greenock, — 23 Mar., 1886

RANKIN, MATTHEW, c/o Messrs Rankin & Demas, Engineers, Smyrna, — G. 2 Nov., 1880; M. 20 Mar., 1894

RANKIN, ROBERT, Jun., 6 Brighton place, Govan, — 22 Jan., 1901

RANKINE, DAVID, 238 West George street, Glasgow, — 22 Oct., 1872

RAPHAEL, ROBERT A., 150 Renfrew street, Glasgow, G. 24 Dec., 1895; M. 27 Oct., 1903

REED-COOPER, T. L., 70 West Cumberland street, Glasgow, 22 Dec., 1896

REID, ANDREW T., Hydepark Locomotive works, Glasgow, G. 21 Dec., 1886; M. 18 Dec., 1894

REID, GEORGE W., Inchanga, Hillfoot, Bearsden, 21 Nov., 1883

REID, J. MILLER, 110 Lancefield street, Glasgow, 23 Mar., 1897

†REID, JAMES, Shipbuilder, Port-Glasgow, 17 Mar., 1869

REID, JAMES, 3 Cart street, Paisley, 25 Jan., 1898

†REID, JAMES B., Chapelhill, Paisley, 24 Nov., 1891

REID, JAMES G., Moorpark Bolt and Nut works, Renfrew, G. 23 Dec., 1894; M. 21 Feb., 1899

†REID, JOHN, 7 Park terrace, Kelvinside, Glasgow, G. 21 Dec., 1886; M. 18 Dec., 1894

REID, JOHN, Baltic Chambers, 50 Wellington street, Glasgow, 18 Dec., 1900

REID, JOHN WILSON, Napier house, Bridge of Allan, N.B., 21 Jan., 1902

REID, ROBERT SHAW, 79 West Regent street, Glasgow, 21 Mar., 1899

REID, THOMAS, Jun., 6 Bridge street, Abbey, Paisley, 18 Dec., 1900

REID, W. J. H., Redlea, Linwood, Nr. Paisley, 16 Dec., 1902

REID, WILLIAM PATON, 35 Dunearn street, Glasgow, W., 23 Feb., 1904

RENNIE, ARCHIBALD, 3 Bawhirley road, Greenock, S. 31 Oct., 1902; M. 28 Apr., 1903

REW, JAMES H., Ardfern, Victoria place, Airdrie, 27 Oct., 1896

REYNOLDS, CHARLES H., Frederiksgade 7², Copenhagen, G. 23 Dec., 1873; M. 22 Nov., 1881

RICHARDSON, ANDREW, Soho Engine works, Paisley, 26 Jan., 1904

RICHMOND, Sir DAVID, North British Tube works, Govan, 21 Dec., 1897

RICHMOND, JAMES, Roselyn, 95 Maxwell drive, Pollokshields, Glasgow, G. 23 Jan., 1894; M. 23 Oct., 1900

RICHMOND, JOHN R., Holm foundry, Cathcart, Glasgow, 28 Jan., 1896

RIDDELL, W. G., c/o Messrs John Hastie & Co., Kilblain Engine Works, Greenock, 21 Feb., 1899

RIEKIE, JOHN, Argarth, Dumbreck, Glasgow, 29 Oct., 1901

RISK, ROBERT, Halidon Villa, Cambuslang, 23 Mar., 1897

RITCHIE, DUNCAN, 34 Hillfoot street, Dennistoun, Glasgow, 16 Dec., 1902

RITCHIE, GEORGE, Parkhead Forge, Glasgow, 15 June, 1898

ROBERTS, W. G. 29 Oct., 1901

ROBERTSON, ALEXANDER, Jun., c/o Messrs Matthew Reid & Co., Kilmarnock, 22 Dec., 1896

ROBERTSON, ALEXANDER, 8 Darnley road, Pollokshields, Glasgow, G. 26 Oct., 1886; M. 23 Feb., 1904

ROBERTSON, ANDREW R., 8 Park Circus place, Glasgow, G. 12 Nov., 1892; M. 23 Feb., 1897

ROBERTSON, Prof. DAVID, B.Sc., 16 Rokeby avenue, Redland, Bristol, G. 19 Dec., 1899; M. 28 Apr., 1903

ROBERTSON, DAVID W., Dalziel Bridge works, Motherwell, 26 Nov., 1901

ROBERTSON, DUNCAN, Baldroma, Ibrox, Glasgow, 24 Oct., 1876

ROBERTSON, ROBERT, B.Sc., 154 West George street, Glasgow, 20 Nov., 1900

ROBERTSON, WILLIAM, 121 St. Vincent street, Glasgow, 25 Nov., 1863

ROBIN, MATTHEW, 58 Dumbreck road, Dumbreck, Glasgow, G. 20 Dec., 1887; M. 25 Jan., 1898

ROBINSON, J. F., 17 Victoria street, Westminster, London, 24 Apr., 1888

ROBINSON, ROBERT, 54 Balshagray avenue, Partick, 3 Mar., 1903

ROBSON, GEORGE J., 22 Bath street, Glasgow, 21 Mar., 1899

*†ROBSON, HAZELTON R., 14 Royal crescent, Glasgow, Original

RODGER, ANDERSON, Glenpark, Port-Glasgow, 21 Mar., 1893

RODGER, ANDERSON, Jun., Glenpark, Port-Glasgow, G. 15 June, 1898; M. 3 May, 1904

ROGER, GEORGE WILLIAM, 4 Lloyd's avenue, Fenchurch street, London, E.C., G. 24 Nov., 1896; M. 18 Dec., 1900

ROSE, JOSEPH, "Westoe," Scotstounhill, Glasgow, 3 May, 1904

ROSENTHAL, JAMES H., Oriel House, 30 Farringdon street, London, 24 Nov., 1896

ROSS, J. MACEWAN, St. Helens, Troon, G. 28 Nov., 1882; M. 27 Oct., 1891

ROSS JAMES R., 7 Ashfield gardens, Jordanhill, Glasgow, 24 Nov., 1896

ROSS, RICHARD G., 21 Greenhead street, Glasgow, 11 Dec., 1861

ROSS, WILLIAM, Messrs Malone, Alliott & Co., Ltd., 101 St. Vincent street, Glasgow, 18 Dec., 1900

ROWAN, FREDERICK JOHN, 71a West Nile street, Glasgow, 26 Jan., 1892

ROWAN, JAMES, 231 Elliot street, Glasgow, G. 21 Dec., 1875; M. 27 Jan., 1885

ROWLEY, THOMAS, Board of Trade Offices, Virginia street, Greenock, 18 Dec., 1888

ROY, WILLIAM, Bowden view, Melksham, Wilts, G. 25 Jan., 1898; M. 21 Apr., 1903

RUDD, JOHN A., 177 West George street, Glasgow, G. 24 Jan., 1888; M. 15 June, 1898

RUSSELL, ALEXANDER C., 655 Hawthorn street, Springburn, Glasgow, G. 15 Apr., 1902; M. 22 Dec., 1903

RUSSELL, FREDERICK ALEXANDER, 20 Skirving street, Shawlands, Glasgow, 25 Jan., 1888

†RUSSELL, GEORGE, Belmont, Uddingston, G. 22 Dec., 1858; M. 4 Mar., 1863

†RUSSELL, JAMES, Waverley, Uddingston, G. 24 Nov., 1891; M. 25 Jan., 1898

RUSSELL, JAMES E., c/o Cluness, 25 Woodside quadrant, W., Glasgow, G. 22 Dec., 1891; M. 27 Oct., 1903

RUSSELL, JOSEPH, Shipbuilder, Port-Glasgow, 22 Feb., 1881

RUSSELL, JOSEPH WILLIAM, 50 Charles street, St. Rollox, Glasgow, G. 6 Apr., 1887; M. 25 Jan., 1898

RUSSELL, THOMAS W., Admiralty, 21 Northumberland avenue, London, W.C., 27 Apr., 1897

RUTHERFORD, A. K., Engineer's Office, Natal Government Railways, Pietermaritzburg, Natal, 24 Dec., 1901

RUTHERFORD, GEORGE, Mercantile Pontoon Company, Cardiff, 23 Mar., 1897

SADLER, Prof. HERBERT C., D.Sc., University of Michigan, Ann Arbor, Michigan, U.S.A., G. 19 Dec., 1893; M. 23 Oct., 1900

SALMON, EDWARD MOWBRAY, Lloyd's Register, 71 Fenchurch street, London, E.C., 21 Jan., 1890

SALMOND, HENRY, 93 Hope street, Glasgow, 18 Dec., 1900

SAMPSON, ALEXANDER W., Bonnington, 9 Beech avenue, Bellahouston, 22 Dec., 1896

SAMSON, PETER, Board of Trade Offices, 54 Victoria street, Westminster, London, S.W., 24 Oct., 1876

SAMUEL, JAMES, Jun., 185 Kent road, Glasgow, 24 Feb., 1885

SANDERSON, JOHN, Lloyd's Register, Royal Exchange, Middlesbro'-on-Tees, 20 Feb., 1883

SAYERS, JAMES EDMUND, 189 St. Vincent street, Glasgow, 24 Dec., 1901

SAYERS, WILLIAM BROOKS, 189 St. Vincent street, Glasgow, 25 Oct., 1892

SCOBIE, ALEXANDER, 58 West Regent Street, Glasgow, G. 27 Oct., 1885; M. 23 Feb., 1904

†SCOBIE, JOHN, c/o Alfred Scobie, Esq., 58 West Regent street, Glasgow, G. 25 Mar., 1878; M. 23 Oct., 1889

SCOTT, CHARLES CUNNINGHAM, Greenock Foundry, Greenock, 27 Oct., 1896

SCOTT, CHARLES WOOD, Dunarbuck, Bowling, 15 June, 1898

SCOTT, JAMES, Rock Knowe, Tayport, N.B., 22 Dec., 1896

SCOTT, JAMES, Jun., Strathclyde, Bowling, 15 June, 1898

SCOTT, JAMES G., 19 Mar., 1901

SCOTT, JOHN, 11 Grosvenor street, Edinburgh, 25 Jan., 1881

SEATH, WILLIAM Y., 121 St. Vincent street, Glasgow, G. 23 Mar., 1886; M. 27 Oct., 1903

SELBY-BIGGE, D., 27 Mosley street, Newcastle-on-Tyne, 21 Feb., 1899

SHANKS, JAMES KIRKWOOD, Engineer, Beechfield, Denny, 23 Apr., 1901

SHANKS, WILLIAM, Tubal works, Barrhead, 15 June, 1898

SHARER, EDMUND, Scotstoun house, Scotstoun, Glasgow, 30 Apr., 1895

SHARP, JOHN, 28 Burnbank gardens, Glasgow, G. 24 Oct., 1882; M. 22 Nov., 1898

SHARPE, ROBERT, Corporation Gas Works, Belfast, 22 Jan., 1901

SHEARER, Sir JOHN, 13 Crown terrace, Dowanhill, Glasgow, 23 Oct., 1900

SHEDDEN, WILLIAM, 3 Andrew's street, Paisley, 24 Oct., 1899

SHEPHERD, JOHN W., Carrickarden, Bearsden, 26 Mar., 1889

SHUTE, ARTHUR E., 12 Clydeview, Partick, Glasgow, 27 Oct., 1896

SHUTE, CHARLES W., 38 Rowallan gardens, Partick, Glasgow, 27 Oct., 1896

SHUTE, T. S., 8 Belvidere road, Sunderland, G. 19 Dec., 1893; M. 22 Feb., 1898

SIME, JOHN, 96 Buchanan street, Glasgow, 26 Jan., 1897

†SIMPSON, ALEXANDER, 175 Hope street, Glasgow, 22 Jan., 1862

SIMPSON, ROBERT, B.Sc., 175 Hope street, Glasgow, 25 Jan., 1887

SIMPSON, WILLIAM, 15 Regent Quay, Aberdeen, 20 Nov., 1900

SINCLAIR, D. S., London road Iron works, Glasgow, 24 Dec., 1901

SINCLAIR, NISBET, 2 Gardenside avenue, Carmyle, G. 20 Mar., 1877; M. 20 Dec., 1887

SLIGHT, GEORGE H., Jun., c/o James Slight, Esq., 131 West Regent street, Glasgow, G. 28 Nov., 1882; M. 22 Oct., 1889

SMAIL, DAVID, c/o Messrs George Webster & Son, 19 Waterloo street, Glasgow, 22 Jan., 1901

SMALL, WILLIAM O., Carmyle avenue, Carmyle, 28 Feb., 1897

SMART, LEWIS A., Birkbeck Bank Chambers, Holborn, London, 22 Mar., 1898

SMILLIE, SAMUEL, 71 Lancefield street, Glasgow, A. 24 Jan., 1888; M. 22 Feb., 1898

SMITH, ALEXANDER, 653 Shields road, Glasgow, G. 24 Nov., 1891; M. 29 Oct., 1901

SMITH, HERBERT GARDNER, Leewood, Helensburgh, 26 Nov., 1901

SMITH, HUGH WILSON, Netherby, N. Albert road, Pollokshields, Glasgow, 25 Jan., 1898

SMITH, JAMES, Tinley Manor, Chakas Kraal, Durban, South Africa, 23 Oct., 1888

SMITH, JAMES A., Union Bank house, Virginia place, Glasgow, G. 18 Dec., 1894; A.M. 28 Apr., 1903; M. 27 Oct., 1903

SMITH, OSBOURNE, Possil Engine works, Glasgow, 24 Dec., 1895

SMITH, ROBERT, c/o Mrs Chisholm, 229 North street, Glasgow, 20 Mar., 1900

SMITH, ROBERT BRUCE, 60 Guilford road, Greenwich, 20 Jan., 1903

SMITH, WILLIAM J., 7 Newark drive, Pollokshields, Glasgow, 24 Jan., 1899

SNEDDON, RICHARD M., 45c Whifflet street, Coatbridge, G. 21 Nov., 1899; M. 18 Mar., 1902

SNEDDON, W. R., Shipyard, Irvine, 22 Jan., 1901

SNOWBALL, EDWARD, 10 Broomfield terrace, Springburn, Glasgow, 22 Feb., 1870

SOMERVAIL, PETER A., Dalmuir Ironworks, Dalmuir, 25 Jan., 1887

SOMERVILLE, THOMAS A., 267 University street, Montreal, Canada, 22 Feb., 1898

SOMMERVILLE, ROBERT G., Jun., Hillside, Port-Glasgow, 29 Oct., 1901

SOTHERN, JOHN W., 59 Bridge street, Glasgow, 29 Oct., 1901

SPALDING, WILLIAM, 9 Crown Circus road, W., Glasgow, G. 25 Oct., 1892 M. 16 Dec., 1902

SPENCE, WILFRID L., Oakleigh, Alloa, 28 Apr., 1903

SPROUL, A., 13 Greenlaw avenue, Paisley, 19 Mar., 1901

STARK, JAMES, 13 Princes gardens, Dowanhill, Glasgow, 27 Oct., 1896

STARK, JAMES, Penang, Straits Settlement, G. 22 Dec., 1891 M. 26 Jan., 1904

†STEPHEN, ALEXANDER E., 8 Princes terrace, Dowanhill, Glasgow, 18 Dec., 1883

†STEPHEN, FREDERICK J., Linthouse, Govan, 30 Apr., 1895

STEPHEN, J. M., 12 Campania place, Govan, 19 Mar., 1901

*†STEPHEN, JOHN, Linthouse, Govan,

STEVEN, JAMES, Eastvale place, Kelvinhaugh, Glasgow, 23 Oct., 1900

STEVEN, JOHN, Eastvale place, Kelvinhaugh, Glasgow, 26 Oct., 1897

STEVEN, JOHN A., 12 Royal crescent, Glasgow, G. 22 Nov., 1881 M. 3 May, 1904

STEVEN, JOHN WILSON, 8 Clarence Drive, Hyndland, Glasgow, 20 Dec., 1898

STEVEN, WILLIAM, 420 Sauchiehall street, Glasgow, 23 Jan., 1894

STEVENS, JOHN, Marsden, Renfrew, 23 Mar., 1897

STEVENSON, WILLIAM F., 49 Park drive, South, Whiteinch, Glasgow, 18 Dec., 1900

STEWART, ALEXANDER W., 55 West Regent Street, Glasgow, 23 Jan., 1894

†STEWART, JAMES, Harbour Engine works, 60 Portman street, Glasgow, 25 Mar., 1890

STEWART, JAMES, Messrs L. Sterne & Co., 155 North Woodside road, Glasgow, 25 Oct., 1898

STEWART, JAMES C., 54 George square, Glasgow, 24 Dec., 1901

STEWART, JAMES, Dunolly, Holmfauldhead drive, South Govan, 23 Feb., 1904

STEWART, JOHN GRAHAM, B.Sc., Ault Wharrie, Dunblane, 22 Mar., 1892

STEWART, W. MAXWELL, 55 W. Regent street, Glasgow, 21 Nov., 1899

STRACHAN, ROBERT, 55 Clifford street, Ibrox, Govan, 22 Nov., 1898

STRATHERN, ALEXANDER G., Hillside, Stepps, N.B., 25 Apr., 1899

STUART, JAMES, 94 Hope street, Glasgow, 22 Oct., 1889

STUART, JAMES TAIT, 2 Bowmont terrace, Kelvinside, Glasgow, 18 Dec., 1900

SURTEES, FRANCIS VERE, Messrs Lobnitz & Co., Ltd., Renfrew, 19 Feb., 1901

SUTHERLAND, SINCLAIR, North British Tube works, Govan, 21 Dec., 1897

SYME, JAMES, 8 Glenavon terrace, Partick, 23 Jan., 1877

TANNETT, JOHN CROYSDALE, Vulcan works, Paisley, 25 Jan., 1898

TATHAM, STANLEY, Montana, Burton road, Branksome park, Bournemouth, W., G. 21 Dec., 1880 M. 15 June, 1898

TAVERNER, H. LACY, 48 West Regent street, Glasgow, 22 Dec., 1896

TAYLOR, BENSON, 21 Thornwood avenue, Partick, 20 Nov., 1900

TAYLOR, JAMES, 3 Westminster terrace, Ibrox, Glasgow, 16 Dec., 1902

TAYLOR, PETER, Selby Shipbuilding and Engineering Co., Ltd., Ousegate, Selby, 28 Apr., 1885

TAYLOR, ROBERT, 28 Ardgowan street, Greenock, 27 Oct., 1896

TAYLOR, STAVELEY, Messrs Russell & Company, Port-Glasgow, 25 Mar., 1879

TAYLOR, THOMAS, c/o Messrs Smith, Bell & Co., Manila, Phillipine Islands, 29 Oct., 1901

TERANO, Prof. SEIICHI, College of Engineering, Imperial University, Tōkyō, Japan, 21 Feb., 1899

THEARLE, SAMUEL J. P., 71 Fenchurch Street, London, 22 Dec., 1896

THISTLETHWAITE, JOHN DICKINSON, Mechanical Engineer, Harbours and Rivers Department, Brisbane, Queensland, 28 Apr., 1903

THODE, GEORGE W., 4 Prince Friedrich-Carl Strasse, Rostock, M.S., Germany, 27 Jan., 1885

THOM, JOHN, 8 Park Avenue, Glasgow, 26 Feb., 1889

THOMPSON, W. B., Ellengowan, Dundee, 14 May, 1878

THOMSON, Prof. ARTHUR W., D.Sc., College of Science, Poona, India, 26 Apr., 1887

THOMSON, G. CALDWELL, 23 Elisabeth street, Riga, Russia, 24 Oct., 1893

THOMSON, GEORGE, 14 Caird drive, Partickhill, Glasgow, 18 Dec., 1883

THOMSON, GEORGE, 3 Woodburn terrace, Morningside, Edinburgh, G. 23 Nov., 1880 M. 20 Nov., 1894

THOMSON, GEORGE C., 53 Bedford road, Rock Ferry, near Birkenhead, G. 24 Feb., 1874 M. 22 Oct., 1889

THOMSON, JAMES, Hayfield, Motherwell, G. 20 Nov., 1894 M. 20 Nov., 1900

THOMSON, JOHN, 3 Crown terrace, Dowanhill, Glasgow, 20 May, 1868

THOMSON, JOHN, 44 St. Vincent crescent, Glasgow, 26 Nov., 1901

THOMSON, R. H. B., Govan Shipbuilding yard, Govan, 26 Feb., 1895

THOMSON, ROBERT, Messrs Barr, Thomson & Co., Ltd., Kilmarnock, 25 Jan., 1898

THOMSON, WILLIAM, 20 Huntly gardens, Kelvinside, Glasgow, G. 23 Dec., 1884; M. 27 Oct., 1896

THOMSON, WILLIAM, Royal Institution Laboratory, Manchester, 17 Feb., 1908

TIDD, E. GEORGE, 68 Gordon street, Glasgow, 22 Oct., 1895

TOD, PETER, c/o Messrs E. H. Williamson & Co., Engineers, Lightbody street, Liverpool, G. 27 Oct., 1885; M. 27 Oct., 1903

TODD, DAVID R., 39-40 Arcade Chambers, St. Mary's Gate and Dean's Gate, Manchester, G. 25 Jan., 1887; M. 25 Oct., 1892

TORRIE, JAMES, Stewarton, 18 Mar., 1902

TULLIS, DAVID K., Kilbowie Iron works, Kilbowie, 23 Nov., 1897

TULLIS, JAMES, Kilbowie Iron works, Kilbowie, 23 Nov., 1897

TURNBULL, ALEXANDER, St. Mungo's works, Bishopbriggs, Glasgow, 21 Nov., 1876

TURNBULL, ALEXANDER POTT, 65 West Regent street, Glasgow, 25 Jan., 1898

TURNBULL CAMPBELL, 190 West George street, Glasgow, G. 27 Oct., 1891; M. 27 Oct., 1903

TURNBULL, JAMES, Basford house, Seymour grove, Manchester, G. 22 Mar., 1892; M. 27 Oct., 1903

TURNBULL, W. L., 190 West George street, Glasgow, G. 27 Oct., 1891; M. 27 Oct., 1903

TURNER, THOMAS, Caledonia works, Kilmarnock, 22 Jan., 1901

WADDELL, JAMES, 15 Moray place, Glasgow, 23 Mar., 1897

WALKER ARCHIBALD, 24 Leadenhall street, London, E.C., 26 Nov., 1901

WALKER, JOHN, Hillside, Newlands road, Newlands, G. 20 Nov., 1894; M. 19 Dec., 1899

WALLACE, DUNCAN M., 65 Union street, Greenock, 27 Oct., 1896

WALLACE, JAMES LOCH, 15 Clifford street, Glasgow, S.S., 18 Feb., 1902

WALLACE, JOHN, Jun., Kidbrooke, Hanover street, Helensburgh, G. 26 Jan., 1892; M. 22 Jan., 1901

WALLACE, PETER, Ailsa Shipbuilding Co., Troon, 23 Jan., 1883

WALLACE, W. CARLILE, Messrs John Brown & Co., Ltd., 21 Thames street, New York, U.S.A., 24 Mar., 1885

WANNOP, CHARLES H., Messrs A. Stephen & Son, Linthouse, Glasgow, G. 24 Feb., 1885; M. 22 Mar., 1904

WARD, J. C. A., Birchmead, Weymouth park, Walton-on-Thames, Surrey, 22 Nov., 1898

WARD, JOHN, Leven Shipyard, Dumbarton, 26 Jan., 1886

WARDE, HENRY W., 69a Waterloo street, Glasgow, 15 June, 1898

WARDEN, WILLOUGHBY C., 68 Gordon street, Glasgow, 24 Mar., 1896

WARNOCK, WILLIAM FINDLAY, 274 Bath street, Glasgow, 21 Jan., 1902

WATKINSON, Prof. W. H., 190 West Regent street, Glasgow, 19 Dec., 1893

WATSON, G. L., 53 Bothwell street, Glasgow, 23 Mar., 1875

WATSON, JAMES W., c/o Messrs McDonald, Fraser & Son, Fredictown, New Brunswick, Canada, 17 Feb., 1903

WATSON, ROBERT, 10 East Nelson street, Glasgow, G. 22 Mar., 1881 M. 29 Oct., 1901

WATSON, WILLIAM, Clyde Shipping Company, Greenock, 24 Nov., 1896

WATT, ALEXANDER, Inchcape, Paisley, 25 Jan., 1898

WATT, ROBERT D., c/o Messrs Butterfield & Swire, French Bund, Shanghai, China, G. 27 Apr., 1880 M. 27 Oct., 1903

WEBB, R. G., Messrs Richardson & Cruddas, Byculla, Bombay, G. 21 Dec., 1875 M. 26 Oct., 1886

WEBSTER, JAMES, Messrs Sharp, Stewart, & Co., Ltd., Atlas works, Springburn, Glasgow, 21 Mar., 1899

WEDDELL, ALEXANDER H., B.Sc., Park villa, Uddingston, G. 22 Dec., 1896 M. 16 Dec., 1902

WEDDELL, JAMES, Park villa, Uddingston, 22 Dec., 1896

WEDGWOOD, A., Dennystown Forge, Dumbarton, 18 Dec., 1900

WEDGWOOD, ARTHUR D., Forgemaster, Dumbarton, 26 Jan., 1897

WEIGHTON, Prof. R. L., M.A., 2 Park villas, Gosforth, Newcastle-on-Tyne, G. 17 Dec., 1878 M. 22 Nov., 1887

†WEIR, GEORGE, Yass, near Sydney, New South Wales, 22 Dec., 1874

†WEIR, JAMES, Holmwood, 72 St. Andrew's drive, Pollokshields, Glasgow, 22 Dec., 1874

WEIR, JOHN, 46 Laurance street, Partick, G. 22 Apr., 1884 M. 26 Nov., 1895

†WEIR, THOMAS, China Merchants' Steam Navigation Co., Marine Superintendent's Office, Shanghai, China, 23 Apr., 1889

WEIR, THOMAS D., Messrs Brown, Mair, Gemmill & Hyslop, 162 St. Vincent street, Glasgow, G. 19 Dec., 1876 M. 26 Feb., 1884

WEIR, WILLIAM, Holm foundry, Cathcart, Glasgow, G. 28 Jan., 1896 M. 22 Nov., 1898

WEIR, WILLIAM, 231 Elliot street, Glasgow, 22 Jan., 1901

WELSH, JAMES, 3 Princes gardens, Dowanhill, Glasgow, G. 24 Nov., 1885 M. 26 Oct., 1897

WELSH, THOMAS M., 3 Princes gardens, Dowanhill, Glasgow, 17 Feb., 1869

WEMYSS, GEORGE B., 57 Elliot street, Hillhead, Glasgow, G. 28 Nov., 1882 M. 22 Jan., 1901

WEST, HENRY H., 5 Castle street, Liverpool, 23 Dec., 1868

WHITE, RICHARD S., Shirley, Jesmond, Newcastle-on-Tyne, 20 Feb., 1883

WHITEHEAD, ALEXANDER CULLEN, c/o Messrs Whitehead Bros., Engineers, P.O., Box 2786, Johannesburg, S.A., 27 Oct., 1903

WHITEHEAD, JAMES, Howford, Mansewood, Pollokshaws, Glasgow, 6 Apr., 1887

WILLCOX, REGINALD, J. N., Messrs Fleming & Ferguson, Ltd., Paisley, 28 Apr., 1903

WILLIAMS, LLEWELLYN WYNN, B.Sc., Cathcart, Glasgow, 22 Feb., 1898

WILLIAMS, OWEN R., B.Sc., Railway Appliance works, Cathcart, Glasgow, 20 Nov., 1900

WILLIAMS, WILLIAM, 23 Jan., 1900

WILLIAMSON, ALEXANDER, 67 Esplanade, Greenock, 21 Mar., 1899

WILLIAMSON, Sir JAMES, C.B., Admiralty, Whitehall, London, S.W., 23 Dec., 1884

WILLIAMSON, JAMES, Marine Superintendent, Gourock, 24 Mar., 1896

WILLIAMSON, ROBERT, Ormidale, Malpas, near Newport, Mon., 20 Feb., 1883

WILSON, ALEXANDER, City Chambers, Glasgow, 28 Jan., 1896

WILSON, ALEXANDER, Hyde Park Foundry, Finnieston street, Glasgow, 23 Feb., 1897

WILSON, ALEXANDER HALL, B.Sc., Messrs Hall, Russell, & Co., Aberdeen, 23 Oct., 1900

WILSON, DAVID, Arecibo, Porto Rico, West Indies, 25 Oct., 1887

WILSON, GAVIN, 107 Pollok street, S.S., Glasgow, 22 Oct., 1889

WILSON, JOHN, 101 Leadenhall street, London, E.C., 24 Dec., 1895

WILSON, JOHN, 11 Regent Park square, Glasgow, 18 Mar., 1902

WILSON, JOHN, 256 Scotland street, Glasgow, 22 Dec., 1903

WILSON, SAMUEL, 2 Whitehill gardens, Dennistoun, Glasgow, 3 Mar., 1903

WILSON, WILLIAM CHEETHAM, 122 Balgray hill, Springburn, Glasgow, 24 Nov., 1903

WILSON, W. H., 261 Albert road, Pollokshields, Glasgow, 22 Feb., 1898

WILSON, WILLIAM J., Lilybank Boiler works, Glasgow, 30 Apr., 1895

WOOD, ROBERT C., c/o Messrs A. Rodger & Co., Shipbuilders, Port Glasgow, 23 Mar., 1897

WORKMAN, HAROLD, B.Sc., c/o Messrs Barclay, Curle & Co., Ltd., Whiteinch, Glasgow, 21 Dec., 1897

WRENCH, WILLIAM G., 27 Oswald street, Glasgow, 25 Mar., 1890

WRIGHT, ROBERT, 1 Carment drive, Shawlands, Glasgow, 22 Dec., 1896

WYLIE, ALEXANDER, Kirkfield, Johnstone, 26 Oct., 1897

WYLLIE, JAMES BROWN, Messrs Wyllie & Blake, 219 St. Vincent street, Glasgow, G. 25 Oct., 1887; M. 26 Jan., 1897

WYNNE, ARTHUR A. W., M.A., Messrs C. A. Parsons & Co., 99 Great Clyde street, Glasgow, 20 Jan., 1903

YARDLEY, ROBERT WILLIAM, Lochinvar, Victoria drive, Scotstounhill, Glasgow, 22 Mar., 1904

YOUNG, DAVID HILL, Marine Engineers' Institute, Shanghai, China, G. 20 Nov., 1900; M. 15 Apr., 1902

YOUNG, JOHN, Galbraith street, Stobcross, Glasgow, 27 Nov., 1867

YOUNG, THOMAS, Rowington, Whittingehame drive, Kelvinside, Glasgow, 20 Mar., 1894

YOUNG, WILLIAM ANDREW, Millburn House, Renfrew, 26 Mar., 1895

YOUNGER, A. SCOTT, B.Sc., Westhouse, Dumbreck, Glasgow, 24 Nov., 1896

ASSOCIATE MEMBERS.

ADAM, JOHN WILLIAM, Fergusle villa, Paisley, 28 Apr., 1903

AGNEW, WILLIAM H., Messrs Cammell, Laird & Co., Birkenhead, G. 28 Nov., 1882; A.M. 27 Oct., 1903

AINSLIE, JAMES WILLIAM, 377 Bath street, Glasgow, G. 26 Nov., 1901; A.M. 28 Apr., 1903

ANDERSON, GEORGE, 3329 N. 20th street, Tioga, Philadelphia, U.S.A., G. 26 Nov., 1901; A.M. 16 Dec., 1902

ANDERSON, JAMES, c/o Masson, 26 Merryland street, Govan, A. 24 Apr., 1900; A.M. 17 Feb., 1903

ANDERSON, THOMAS, 326 Cumberland street, Glasgow, G. 29 Oct., 1901; A.M. 28 Apr., 1903

ARBUTHNOTT, DONALD S., c/o Messrs Charles Brand & Son, 65 Renfield street, Glasgow, G. 23 Oct., 1888; A.M. 27 Oct., 1903

ARDILL, WILLIAM, c/o MacIntyre, 939 Sauchiehall street, Glasgow, 17 Feb., 1903

ARUNDEL, ARTHUR S. D., Penn street works, Hoxton, London, N., G. 23 Dec., 1890; A.M. 27 Oct., 1903

BENNETT, DUNCAN, 9 Leslie street, Pollokshields, Glasgow, G. 26 Oct., 1897; A.M. 27 Oct., 1903

BERRY, DAVIDSON, 21 Grange terrace, Langside, Glasgow, G. 19 Mar., 1901; A.M. 27 Oct., 1903

BLAIR, ARCHIBALD, 25 Peel street, Partick, G. 27 Oct., 1891; A.M. 3 May, 1904

BOYD, JAMES, 20 Albert drive, Crosshill, Glasgow, 22 Mar., 1904

BROWN, WILLIAM, 22 Leven street, Pollokshields, Glasgow, G. 26 Nov., 1901; A.M. 21 Apr., 1903

BUCHANAN, WALTER G., 17 Sandyford place, Glasgow, {G. 27 Jan., 1891 / A.M. 28 Apr., 1903}

BUCKLE, JOSEPH, 31 Ferry road, Renfrew, {S. 31 Oct., 1902 / A.M. 28 Apr., 1903}

BURNS, WILLIAM, 10 Queen square, Glasgow, 26 Jan., 1904

BUTLER, JAMES S., 21 Hamilton terrace, W., Partick, {G. 22 June, 1901 / A.M. 3 May, 1904}

CLEGHORN, GEORGE, 2 Clelland place, Ibrox, Govan, 27 Oct., 1903

COCHRAN, ALEXANDER, Messrs Burns & Co., Ltd., Howrah, Calcutta, 3 Mar., 1903

COLEMAN, HENRY CHARLES, Isaac Peral 25, Cadiz, Spain, 3 May, 1904

CRAIG, JAMES, B.Sc., Netherlea, Partick, {G. 22 Feb., 1889 / A.M. 28 Apr., 1903}

DEKKE, K. S., Bergen, Norway, {G. 22 Dec., 1891 / A.M. 27 Oct., 1903}

DIACK, JAMES A., 4 Rosemount terrace, Ibrox, Glasgow, {G. 22 Jan., 1895 / A.M. 27 Oct., 1903}

DRYSDALE, HUGH R. S., 24 Kilmailing terrace, Cathcart, Glasgow, 17 Feb., 1903

DUNLOP, ALEXANDER, 14 Derby terrace, Sandyford, Glasgow, {G. 21 Dec., 1897 / A.M. 28 Apr., 1903}

EDMISTON, ALEXANDER A., Ibrox house, Govan, {G. 22 Feb., 1898 / A.M. 27 Oct., 1903}

FALLON, ALFRED H., Bellview, off Craigton road, Govan, 17 Feb., 1903

FAUT, ALEXANDER, 3 Holland place, Glasgow, {G. 19 Dec., 1899 / A.M. 21 Apr., 1903}

FERGUS, ALEXANDER, 7 Ibrox place, Ibrox, Glasgow, {G. 22 Dec., 1891 / A.M. 3 May, 1904}

FERGUSON, DANIEL, 27 Oswald street, Glasgow, 27 Oct., 1903

FERNIE, JOHN, 6 Edelweiss terrace, Partickhill, Glasgow, {S. 31 Oct., 1902 / A.M. 28 Apr., 1903}

FINDLATER, JAMES, 124 Pollok street, Glasgow, S.S., {G. 19 Dec., 1899 / A.M. 23 Feb., 1904}

FRANCE, JAMES, 8 Hanover terrace, Kelvinside, Glasgow, {G. 26 Oct., 1897 / A.M. 27 Oct., 1903}

FROST, EVELYN F. M., 76 Hill street, Garnethill, Glasgow, {S. 31 Oct., 1902 / A.M. 28 Apr., 1903}

GALLACHER, PATRICK, 72 Fulbar street, Renfrew, 21 Apr., 1903

GILCHRIST, JAMES, B.Sc., Caledonian Railway Company, Buchanan street, Glasgow, 26 Apr., 1904

HORN, PETER ALLAN, 29 Regent Moray street, Glasgow, {G. 26 Oct., 1897 / A.M. 27 Oct., 1903}

HOWIE, WILLIAM, 5 Fairlie Park drive, Partick, {G. 23 Apr., 1901 / A.M. 28 Apr., 1903}

HUTCHISON, ROBERT, c/o Messrs Burns & Co., Engineers, Howrah, Calcutta, {G. 24 Oct., 1899 / A.M. 27 Oct., 1903}

IRVINE, ARCHIBALD B., 8 Newton terrace, Glasgow, {G. 20 Nov., 1894 / A.M. 27 Oct., 1903}

JOHNSON, HERBERT AUGUST, 41 James street, Holderness road, Hull, 22 Mar., 1904

JOHNSTONE, ALEXANDER C., 167 Langside road, Crosshill, Glasgow, {G. 25 Jan., 1898 / A.M. 27 Oct 1903}

JOHNSTONE, JOHN GAVIN, B.Sc., Messrs Biles, Gray & Co., 175 West George street, Glasgow, 22 Dec., 1903

JOHNSTONE, ROBERT, c/o Mrs M'Vicar, 20 Rothesay gardens, Partick, {G. 26 Apr., 1898 / A.M. 27 Oct., 1903}

JONES, T. C., 17 Kent Avenue, Jordanhill, Glasgow, {G. 23 Nov., 1897 / A.M. 27 Oct., 1903}

KELLNER, OTTOKAR, Chapelton, Dumbarton, 17 Feb., 1903

KIRK, JOHN, Oakfield, University avenue, Glasgow, {G. 20 Nov., 1894 / A.M. 28 Apr., 1903}

KNOX, ALEXANDER, 10 Westbank terrace, Hillhead, Glasgow, {G. 23 Nov., 1897 / A.M. 22 Dec., 1903}

LAMB, STUART D. R., Civil Engineer, St. Enoch Station, Glasgow, {G. 23 Jan., 1900 / A.M. 23 Feb., 1904}

LEARMONTH, ROBERT, c/o H. Drysdale, 590 Dalmarnock road, Glasgow, {G. 26 Nov., 1901 / A.M. 21 Apr., 1903}

LE CLAIR, LOUIS J., 115 Donore terrace, South Circular road, Dublin, {G. 24 Nov., 1896 / A.M. 21 Apr., 1903}

LEE, JOHN, 10 Bisham gardens, Highgate, London, N., {G. 26 Jan., 1886 / A.M. 21 Apr., 1903}

LOWE, JAMES, c/o Manson, 10 Corunna street, Glasgow, {G. 24 Oct., 1899 / A.M. 23 Feb., 1904}

LYNN, ROBERT R., 7 Highburgh terrace, Dowanhill, Glasgow 20 Jan., 1903

LYONS, LEWIS JAMES, 25 Broadway, Camden, New Jersey, U,S.A. 23 Feb., 1904

MCCULLOCH, JOHN, 49 Arlington street, Glasgow, {G. 23 Oct., 1900 / A.M. 3 May, 1904}

MCEWAN, JOHN, 3 Norse road, Scotstoun, Glasgow, {G. 26 Oct., 1887 / A.M. 28 Apr., 1903}

McGILVRAY, JOHN A., 555 Govan road, Govan, G. 26 Oct., 1897; A.M. 27 Oct., 1903

McINTYRE, JAMES N., 33 Hayburn crescent, Partick, G. 20 Nov., 1900; A.M. 27 Oct., 1903

McIVOR, JOHN, Moss cottage, Nitshill, Glasgow, 3 Mar., 1903

MACKIE, JAMES, 344 St. Vincent street, Glasgow, G. 23 Mar., 1897; A.M. 28 Apr., 1903

MACKINTOSH, R. D.; P.O. Box 6075, Johannesburg, South Africa, G. 20 Nov., 1894; A.M. 27 Oct., 1903

MANNERS, EDWIN, 50 McCulloch street, Pollokshields, Glasgow, 17 Feb., 1903

MENZIES, GEORGE, 20 St. Vincent crescent, Glasgow, G. 22 Jan., 1889; A.M. 24 Nov., 1903

MILLAR, JOHN SIMPSON, 22 Rothesay gardens, Partick, G. 20 Nov., 1894; A.M. 22 Dec., 1903

MILLAR, WILLIAM PETTIGREW, 4 Parkview gardens, Tollcross, Glasgow, G. 18 Dec., 1900; A.M. 17 Feb., 1903

MITCHELL, ALEXANDER ROBERTSON, Kilbowie cottages, Kilbowie hill, Clydebank, 24 Nov., 1903

MITCHELL, R. M., 24 Howard street, Bridgeton, Glasgow, G. 23 Nov., 1897; A.M. 22 Dec., 1903

MORGAN, ANDREW, 20 Minerva street, Glasgow, G. 18 Dec., 1900; A.M. 22 Dec., 1903

MORRISON, A., Alt-na-craig, Greenock, G. 23 Nov., 1897; A.M. 3 May, 1904

MUIR, ANDREW A., 189 Renfrew street, Glasgow, G. 22 Nov., 1898; A.M. 23 Feb., 1904

NOWERY, W. F., c/o Jack, 71 Grant street, Glasgow, G. 21 Dec., 1897; A.M. 28 Apr., 1903

RALSTON, SHIRLEY BROOKS, 34 Gray street, Glasgow, G. 23 Feb., 1897; A.M. 23 Feb., 1904

RIDDLESWORTH, W. HENRY, M.Sc., 63 Polworth gardens, Partickhill, Glasgow, G. 24 Oct., 1899; A.M. 28 Apr., 1903

ROBERTSON, ALFRED J. C., c/o A. W. Robinson, 14 Phillips square, Montreal, Canada, 16 Dec., 1902

ROBERTSON, JOHN, Jun., 7 Maxwell terrace, Shields road, Pollokshields, Glasgow, 20 Jan., 1903

ROSS, JOHN RICHMOND, Messrs Balfour, Lyon, & Co., Valparaiso, G. 25 Oct., 1898; A.M. 26 Jan., 1904

SAUL, GEORGE, Yloilo Engineering works, Yloilo, Phillipine Islands, 21 Apr., 1903

SHEARER, JAMES, 30 McCulloch street, Pollokshields, Glasgow, 3 Mar., 1903

SMITH, JAMES, 4 Clydeview, Partick, Glasgow, G. 18 Dec., 1900; A.M. 28 Apr., 1903

SMITH, JAMES, 23 Barrington drive, Glasgow, {G. 20 Dec., 1892 / A.M. 27 Oct., 1903}

SPEAKMAN, EDWARD M., Turbine Office, British Westinghouse works, Manchester, 16 Dec., 1902

SPERRY, AUSTIN, 2353 Larkin street, San Francisco, Cal., U.S.A., {G. 23 Mar., 1897 / A.M. 22 Mar., 1904}

STEELE, DAVID J., Davaar, 41 Albert drive, Pollokshields, Glasgow, {G. 20 Dec., 1898 / A.M. 27 Oct., 1903}

STEPHEN, DAVID BELFORD, 14 Whitevale street, Dennistoun, Glasgow, 24 Nov., 1903

STEVENS, THOMAS, 55 Ferry road, Renfrew, 21 Apr., 1903

STEVENSON, GEORGE, Hawkhead, Paisley, {G. 22 Nov., 1898 / A.M. 24 Mar., 1903}

STIRLING, ANDREW, 3 Greenvale terrace, Dumbarton, {G. 21 Dec., 1875 / A.M. 22 Dec., 1903}

STOBIE, PETER, 33 Kelvinhaugh street, Glasgow, {S. 31 Oct., 1902 / A.M. 28 Apr., 1903}

SYMINGTON, JAMES R., Messrs Butterfield & Swire, Hong Kong, China, {G. 21 Dec., 1886 / A.M. 26 Jan., 1904}

TAYLOR, J. F., 23 Roslea drive, Dennistoun, Glasgow, {G. 23 Nov., 1897 / A M. 27 Oct., 1903}

TOSTEE, EVENOR, (Fils) 3A Harvie street, Paisley road W., Glasgow, 26 Jan., 1904

URE, SEBASTIAN, G. M., 514 St. Vincent street, Glasgow, 22 Dec., 1903

UTTING, SAMUEL, 29 Keir street, Pollokshields, Glasgow, 22 Dec., 1903

WELSH, GEORGE MUIR, 3 Princes gardens, Dowanhill, Glasgow, {G. 21 Dec., 1897 / A M. 28 Apr., 1903}

WHITELAW, ANDREW H., B.Sc., 74 Dundonald road, Kilmarnock, {G. 20 Nov., 1900 / A.M. 27 Oct., 1903}

WILSON, CHARLES A., 36 Bank street, Hillhead, Glasgow, 22 Mar., 1904

WOODS, JOSEPH, 87 Grosvenor Road, Ilford, Essex, {G. 25 Feb., 1896 / A.M. 27 Oct., 1903}

WOODSIDE, HUGH R., Artnox, Dalry, Ayrshire, 16 Dec., 1902

ASSOCIATES.

ADDIE, FRANK R., 8 Westbourne gardens, Kelvinside, Glasgow,	18 Dec., 1900
*AITKEN, THOMAS, 8 Commercial street, Leith,	
ALLAN, HENRY, 25 Bothwell street, Glasgow,	23 Jan., 1900
†ALLAN, JAMES A., 25 Bothwell street, Glasgow,	29 Oct., 1901
ARMOUR, WILLIAM NICOL, 40 West George street, Glasgow,	24 Nov., 1896
BAILLIE, ARCHIBALD, 14 Park terrace, Queen's Park, Glasgow,	25 Jan., 1898
BAIN, W. B., 65 Waterloo street, Glasgow,	22 Jan., 1901
BARCLAY, THOMAS KINLOCH, 55 Lochleven road, Langside, Glasgow,	20 Mar., 1900
BEGG, WILLIAM, 34 Belmont gardens, Glasgow,	19 Dec., 1886
BLAIR, HERBERT J., 30 Gordon street, Glasgow,	23 Feb., 1897
BOWMAN, FREDERICK GEORGE, 21 Kersland terrace, Hillhead, Glasgow,	22 Mar., 1904
BROWN, Capt. A. R., 34 West George street, Glasgow,	21 Dec., 1897
BROWN, THOMAS J., 233 St. Vincent street, Glasgow,	29 Oct., 1901
BUCHANAN, JAMES, Dalziel Bridge works, Motherwell,	26 Nov., 1901
BURNS, Hon. JAMES C., 30 Jamaica street, Glasgow,	23 Oct., 1900
CASSELS, WILLIAM, Cairndhu, 12 Newark drive, Pollokshields, Glasgow,	21 Feb., 1893
CAYZER, Sir CHARLES W., M.P., Gartmore, Perthshire,	27 Oct., 1903
CLARK, ROBERT, 21 Bothwell street, Glasgow,	23 Feb., 1904
CLAUSSEN, A. L., 118 Broomielaw, Glasgow,	22 Jan., 1892
CLYDE, WALTER P., c/o Messrs Dobbie M'Innes, Ltd., 45 Bothwell street, Glasgow,	24 Oct., 1899
DAWSON, DAVID C., 12 York street, Glasgow,	27 Oct., 1903
DEWAR, JAMES, 11 Regent Moray street, Glasgow,	22 Dec., 1897
DODDRELL, EDWARD E., 11 Bothwell street, Glasgow,	26 Oct., 1897
DONALD, JAMES, 123 Hope street, Glasgow,	19 Dec., 1899

Names marked thus * were Associates of Scottish Shipbuilders' Association at incorporation with Institution, 1865.

Names marked thus † are Life Associates.

FERGUSON, PETER, 19 Exchange square, Glasgow,	27 Apr., 1897
FORREST, WILLIAM, 114 Dixon avenue, Glasgow,	19 Feb., 1901
GALLOWAY, JAMES, Jun., Whitefield works, Govan,	27 Oct., 1891
GARDINER, FREDERICK CROMBIE, 24 St. Vincent place, Glasgow,	20 Feb., 1900
GARDINER, WILLIAM GUTHRIE, 24 St. Vincent place, Glasgow,	20 Feb., 1900
GRAHAM, The Most Honourable The Marquis of, Buchanan Castle, Glasgow,	22 Mar., 1904
HENDERSON, JOHN B., Messrs John Brown & Co., Ltd., Clydebank,	22 Mar., 1904
HOLLIS, JOHN, c/o Messrs John Brown & Co., Ltd., 144 St. Vincent street, Glasgow,	23 Nov., 1897
HOPE, ANDREW, 50 Wellington street, Glasgow,	27 Oct., 1903
INVERCLYDE, The Right Honourable Lord, Castle Wemyss, Wemyss Bay,	22 Mar., 1904
KINGHORN, WILLIAM A., 81 St. Vincent street, Glasgow,	24 Oct., 1882
KIRSOP, JAMES NIXON, 31 St. Vincent place, Glasgow,	29 Oct., 1901
KYLE, JOHN, Cathay, Forres, N.B.,	23 Feb., 1897
LOUDON, JAMES M., 22 Clarendon street, Glasgow,	21 Jan., 1902
M'ARA, ALEXANDER, 65 Morrison street, Glasgow,	22 Nov., 1892
MACBETH, GEORGE ALEXANDER, 65 Great Clyde street, Glasgow,	24 Jan., 1899
MACBRAYNE, DAVID HOPE, 119 Hope street, Glasgow,	22 Mar., 1904
MACBRAYNE, LAURENCE, 11 Park Circus place, Glasgow,	26 Mar., 1895
MACDOUGALL, DUGALD, 1 Cross-shore street, Greenock,	26 Jan., 1897
M'INTYRE, JOHN, 33 Oswald street, Glasgow,	23 Feb., 1897
M'INTYRE, T. W., 21 Bothwell street, Glasgow,	24 Jan., 1893
MACLAY, JOSEPH P., 21 Bothwell street, Glasgow,	18 Dec., 1900
M'PHERSON, Captain DUNCAN, 8 Royal crescent, Cross-hill, Glasgow,	26 Jan., 1886
MERCER, JAMES B., Broughton Copper works, Manchester,	24 Mar., 1874
MILLAR, THOMAS, Hazelwood, Langside, Glasgow,	22 Mar., 1898
MILLER, T. B., Sandilands, Aberdeen,	18 Dec., 1900
MOWBRAY, ARCHIBALD H., c/o Messrs Smith & M'Lean, Mavisbank, Glasgow,	22 Feb., 1898
MURRAY, JOHN BRUCE, 24 George square, Glasgow,	18 Mar., 1902

NAPIER, JAMES, M.A., 33 Oswald street, Glasgow, 22 Jan., 1901
*NAPIER, JAMES S., 33 Oswald street, Glasgow,

OVERTOUN, The Right Hon. Lord, Overtoun, Dumbartonshire, 27 Oct., 1903

PAIRMAN, THOMAS, 54 Gordon street, Glasgow, 23 Jan., 1900
PRENTICE, THOMAS, 175 West George street, Glasgow, 24 Nov., 1896

RAEBURN, WILLIAM HANNAY, 81 St. Vincent street, Glasgow, 20 Feb., 1900
REID, JOHN, 30 Gordon street, Glasgow, 22 Dec., 1896
RIDDLE, JOHN C., c/o Messrs Walker & Hall, 8 Gordon street, Glasgow, 15 June, 1898
ROBERTS, WILLIAM IBBOTSON, 15 June, 1898
ROBERTSON, WILLIAM, Oakpark, Mount Vernon, 27 Apr., 1897
ROBINSON, DAVID, 14 Broomhill avenue, Partick, 16 Dec., 1902
ROSS, THOMAS A., Glenwood, Bridge-of-Weir, 20 Mar., 1894
ROXBURGH, JOHN ARCHIBALD, 3 Royal Exchange square, Glasgow, 20 Feb., 1900

SERVICE, GEORGE WILLIAM, 175 West George street, Glasgow, 24 Nov., 1896
SERVICE, WILLIAM, 54 Gordon street, Glasgow, 23 Jan., 1900
SLOAN, GEORGE, 53 Bothwell street, Glasgow, 20 Feb., 1900
SLOAN, ROBERT BELL, 50 Wellington street, Glasgow, 27 Oct., 1903
SLOAN, WILLIAM, 53 Bothwell street, Glasgow, 20 Feb., 1900
†SMITH, GEORGE, c/o Messrs George Smith & Sons, 75 Bothwell street, Glasgow, 22 Jan., 1901
SMITH, JOHN, 2 Doune quadrant, Kelvinside, Glasgow, 22 Feb., 1898
SOTHERN, ROBERT M., 59 Bridge street, Glasgow, 18 Feb., 1902
STEWART, CHARLES R., Messrs J. Stone & Co., 46 Gordon street, Glasgow, 29 Oct., 1907
STEWART JOHN G., 65 Great Clyde street, Glasgow, 18 Dec., 1901
STRACHAN, G., Fairfield works, Govan, 26 Oct., 1890

TAYLOR, FRANK, c/o Messrs Alexander Young & Co., 50 Wellington street, Glasgow, 24 Dec., 1901
TAYLOR, WILLIAM GILCHRIST, 123 Hope street, Glasgow, 23 Jan., 1900
THOMSON, WILLIAM H., 32 Albert Road East, Crosshill, Glasgow, 19 Feb., 1901

WARREN, ROBERT G., 116 Hope street, Glasgow, 28 Jan., 1896
*WATSON, H. J., c/o Messrs Watson Brothers, 142 St. Vincent street, Glasgow,

WEIR, ANDREW, 102 Hope street, Glasgow, 25 Jan., 1898
WHIMSTER, THOMAS, 67 West Nile street, Glasgow, 24 Oct., 1899
WILD, CHARLES WILLIAM, Broughton Copper Company, Limited, 49-51 Oswald street, Glasgow, 24 Mar., 1896
WILLIAMSON, JOHN, 99 Great Clyde street, Glasgow, 28 Apr., 1903
WREDE, FREDERICK LEAR, 25 Bentinck street, Greenock, 25 Jan., 1898

YOUNG, JOHN D., Scottish Boiler Insurance Company, 111 Union street, Glasgow, 19 Dec., 1882
YOUNG, ROBERT, Baltic Chambers, 50 Wellington street, Glasgow, 16 Dec., 1902

STUDENTS.

AITCHISON, JOHN WILSON, 20 Nov., 1900
AITKEN, JOHN, Beech cottage, Balshagray avenue, Partick, 28 Apr., 1903
ALEXANDER, ROBERT, 33 Melville street, Portobello, 23 Oct., 1900
ALEXANDER, WILLIAM, 31 Kelvingrove street, Glasgow, 19 Mar., 1901
ALISON, ALEXANDER E., Devonport, Auckland, New Zealand, 22 Nov., 1898
ALLAN, FREDERICK WM., 8 Gillsland road, Edinburgh, 21 Nov., 1899
ALLAN, JAMES, 326 West Princes street, Glasgow, 24 Jan., 1888
ANDERSON, ADAM R., Harbour works, Durban, Natal, South Africa, 23 Mar., 1897
Ap.-GRIFFITH, YWAIN GORONWY, 39 White street, Partick, 3 Mar., 1903
APPLEBY, JOHN HERBERT, 133 Balshagray avenue, Partick, 27 Oct., 1903

BAIRD, JAMES, 30 St. Andrew's drive, Pollokshields, Glasgow, 26 Jan., 1904
BARNWELL, FRANK SOWTER, Elcho house, Balfron, 18 Feb., 1902
BARNWELL, RICHARD HAROLD, Elcho house, Balfron, 18 Feb., 1902
BARTY, THOMAS PATRICK WILLIAM, c/o Messrs. Forman & M'Coll, 160 Hope street, Glasgow, 18 Dec., 1900
BELL, H. L. RONALD, Redargan, Drumoyne drive, Govan, 22 Mar., 1904
BERTRAM, R. M., 9 Walmer road, Toronto, Canada, 24 Jan., 1899
BINLEY, WILLIAM, Jun., Office of Superintendent Constructor, U.S.N., Gas Engine and Power Co., Morris Heights, New York, U.S.A., 21 Mar., 1899
BISSET, JOHN, 35 Harriet street, Pollokshaws, Glasgow, 18 Dec., 1900

BLACK, JAMES, 3 Clarence street, Paisley, 18 Dec., 1900

BONE, QUINTIN GEORGE, 31 Elgin terrace, Dowanhill, Glasgow, 19 Dec., 1899

BROOKFIELD, JOHN W., Brookhurst, Halifax, Nova Scotia, 18 Feb., 1902

BROWN, ALEXANDER TAYLOR, 1 Broomhill avenue, Partick, Glasgow, 26 Oct., 1897

BRYSON, WILLIAM, 21 Cartvale road, Langside, Glasgow, 24 Oct., 1899

BUCHANAN, JOSHUA MILLER, 4 Eldon terrace, Partickhill, Glasgow, 21 Nov., 1899

BUNTEN, JAMES C., Anderston Foundry, Glasgow, 20 Nov., 1900

CALLANDER, WILLIAM, 100 Bothwell street, Glasgow, 24 Dec., 1901

CAMERON, ANGUS JOHNSTONE, c/o Mrs Granger, 5 Osborne place, Copland road, Govan, 20 Nov., 1900

CLOVER, MAT., 537 Sauchiehall street, Glasgow, 22 Dec., 1903

COCHRANE, JOHN, 15 Ure place, Montrose street, Glasgow, 24 Dec., 1901

CORMACK, JAMES ALEXANDER, 149 Hill street, Garnethill, Glasgow, 24 Nov., 1903

CRAN, J. DUNCAN, 11 Brunswick street, Edinburgh, 21 Jan., 1902

CRAWFORD, ARCHIBALD, P.O. Box 558, Pretoria, S.A., 18 Dec, 1900

CRICHTON, JAMES, B.Sc., c/o Granger, 24 St. Vincent crescent, Glasgow, 22 Mar., 1904

CUBIE, ALEXANDER, Jun., 2 Newhall terrace, Glasgow, 23 Jan., 1900

CUTHBERT, JAMES G., Holmehouse, Ulleskeff, near York, 21 Nov., 1899

DE SOLA, JUAN GARCIA, Sacramento, 57, Cadiz, Spain, 20 Mar., 1900

DIAS, CHRISTOPHER, c/o Gow, 273 Dumbarton road, Glasgow, 16 Dec., 1902

DICKIE, DAVID WALKER, 60 Sardinia terrace, Hillhead, Glasgow, 22 Mar., 1904

DICKIE, JAMES S., San Mateo, California, 19 Dec., 1899

DOBBIE, ROBERT B., 15 Leander Road, Brixton Hill, London, S.W., 24 Oct., 1899

DOBSON, JAMES, c/o Messrs Pooley & Son, Kidsgrove, Staffordshire, 22 Dec., 1896

DORNAN, JAMES F. A., 21 Minerva street, Glasgow, 20 Jan., 1903

DORNAN, JOHN D., 21 Minerva street, Glasgow, 22 Mar., 1904

DRYSDALE, WILLIAM, 3 Whittingehame gardens, Kelvinside, Glasgow, 16 Dec., 1902

DUNCAN, ALEXANDER, c/o E. G. Fraser Luckie, Esq., Hacienda, Andalusia, Huacho, Sayou, Peru, 23 Apr., 1901

DUNSMUIR, GEORGE, Matheran, 27 Sherbrooke avenue, Pollokshields, Glasgow,	21 Apr., 1903
DYER, HENRY,	18 Dec., 1900
FAIRLEY, JOHN, 124 Pitt street, Glasgow	21 Nov., 1899
FAIRWEATHER, GEORGE A. E., Elmwood, Avon street, Motherwell,	26 Nov., 1901
FERGUSSON, W. L., 48 Connaught road, Roath, Cardiff,	22 Dec., 1891
FISH, N., 69 Mayfair avenue, Ilford, Essex,	18 Feb., 1902
FRASER, JOHN ALEXANDER, 969 Govan road, Govan,	26 Jan., 1904
FREER, ROBERT M'DONALD, 14 India street, Glasgow,	27 Oct., 1903
GALBRAITH, HUGH, 2 Hillside villa, Kentish road, Belvidere, Kent,	20 Dec., 1898
GALLOWAY, ANDREW, The Grand Hotel, Heidelberg, Transvaal, S.A.,	24 Oct., 1893
GARDNER, HAROLD THORNBY, Thorncliffe, Skermorlie,	26 Apr., 1904
GIBB, JOHN, 276 Crow road, Partick,	24 Jan., 1899
GILMOUR, ANDREW, Newlea, Crawford street, Motherwell,	20 Dec., 1898
GRAHAM, JOHN, 16 Summerfield cottages, Whiteinch, Glasgow,	26 Apr., 1904
GRANT, WILLIAM, Croft park, High Blantyre,	24 Oct., 1899
GRENIER, JOSEPH R., c/o Mrs Rennie, 8 Franklin terrace, Glasgow,	3 Mar., 1903
HAIGH, BERNARD PARKER, 6 Elmwood gardens, Jordanhill,	20 Jan., 1903
HALLEY, MATTHEW WHITE, 43 Lawrence street, Partick,	22 Mar., 1904
HANNAH, JOHN A., 112 Govanhill street, Glasgow,	26 Nov., 1901
HENDERSON, JOHN ALEXANDER, Hamilton House, Bromley Park, Kent,	22 Mar., 1904
HENRICSON, JOHN A., c/o A. B. Sandoikens, Skeppsdocka, och Mek, Varkstad, Helsingfors, Finland,	19 Dec., 1899
HERSCHEL, A. E. H., 2 Glenavon terrace, Crow road, Partick,	19 Dec., 1899
HODGART, MATTHEW, Linnsburn, Paisley,	22 Dec., 1903
HOLLAND, HENRY NORMAN, Metropolitan Electric Supply Co., Willesden Works, London, N.W.,	22 Nov., 1898
HOLMES, JAMES, 25 St. James street, Paisley,	17 Feb., 1903
HOTCHKIS, MONTGOMERY H., Crookston house, near Paisley,	24 Dec., 1901
HOUSTON, DAVID S., 83 Kilmarnock road, Shawlands, Glasgow,	27 Oct., 1903
HOUSTON, PERCIVAL T., Coronation house, 4 Lloyd's avenue, London, E.C.,	22 Nov., 1898

HOYT, CHARLES S., B.A., 6 Parkgrove terrace, Glasgow, 22 Mar., 1904
HUTTON, W. R., 97 Queensborough gardens, Hyndland, Glasgow, 23 Apr., 1901

IRONS, JAMES HAY, 4 Albert drive, Crosshill, Glasgow, 19 Feb., 1901

JACK, CHARLES, P. M., 17 Albert drive, Pollokshields, Glasgow, 20 Nov., 1900
JANKINS, GARNET EDWARD, N.B.R. Station, Springburn, Glasgow, 3 May, 1904
JENKINS, CHARLES C., 3 Mar., 1903
JOHNSTON, HECTOR, c/o Mrs M'Murray, 169 Great George street, Glasgow, 22 Dec., 1903

KEMP, ROBERT G., 60 Abbey drive, Jordanhill, Glasgow, 28 Oct., 1890
KERMEEN, ROBERT W., 18 Mar., 1902
KIMURA, N., Tokio, Kai-ji-Kioku, Tokyo, Japan, 23 Apr., 1901
KING, CHARLES A., 9 Spring gardens, Kelvinside, Glasgow, 25 Apr., 1893
KINGHORN, DAVID RICHARD, Ardoch, Prenton, Cheshire, 23 Oct., 1900
KINROSS, CECIL GIBSON, 4 Park terrace, Govan, 22 Dec., 1903
KIRBY, WILLIAM HUBERT TATE, 35 Duncan avenue, Scotstoun, Glasgow, 26 Apr., 1904

LLOYD, HERBERT J., Breacan road, Builth, Wales, 21 Dec., 1897
LOADER, EDMUND T., Y.M.C.A. Club, 100 Bothwell Street, Glasgow 20 Nov., 1900

M'CLELLAND, HAROLD R., 3 Caird drive, Partick, 22 Mar., 1904
M'CRACKEN, WILLIAM, 9 Danes drive, Scotstoun, Glasgow, 27 Oct., 1903
MACDONALD, JOHN F., 16 Ruthven street, Kelvinside, Glasgow, 21 Dec., 1897
M'DONALD, CLAUDE KNOX, Lennoxvale, Maryland drive, Craigton, Glasgow, 22 Mar., 1904
MACGREGOR, J GRAHAM, 4 West George street, Glasgow, 18 Feb., 1902
M'HARG, W. S., The Grove, Ibrox, Glasgow, 19 Mar., 1901
M'INTOSH, GEORGE, Dunglass, Bowling, 22 Jan., 1895
MACKAY, HARRY, J. S., 53 Deansgate Arcade, Manchester, 22 Feb., 1898
MACKAY, W. NORRIS, c/o Stenhouse, 87 St. George's Mansions, Glasgow, 22 Jan., 1901
M'KEAN, JAMES, 3 Buchanan terrace, Paisley, 22 Dec., 1903
M'KEAN, JOHN G., c/o Russell, 20 Borough road, North Shields, 23 Oct., 1900

M'LACHLAN, CHARLES ALEX., 8 Queen's crescent, Cathcart, Glasgow, 21 Apr., 1903

MACLAREN, JAMES ERNEST, 3 Porter street, Ibrox, Glasgow, 23 Oct., 1900

M'LAURIN, JAMES H., 34 Park circus, Ayr, 18 Dec., 1900

M'LAY, J. A., Rose Lea, Uddingston, 17 Feb., 1903

M'MILLAN, DUNCAN, 174 Paisley road West, Glasgow, 27 Oct., 1903

MACNICOLL, DONALD, 190 Langlands road, South Govan, 23 Apr., 1901

M'WHIRTER, ANTHONY C., 1009 State street, Schenectady, N.Y., U.S.A., 21 Dec., 1897

MARSHALL, ALEXANDER, Brightons, Polmont station, 18 Mar., 1902

MAITLAND, JOHN M., 13 Rosslyn terrace, Glasgow, 22 Jan., 1901

MATHER, JOHN BOYD, Kirkhill, Mearns, 20 Mar., 1894

MELENCOVICH, ALEXANDRE, 21 Peel street, Partick, 31 Oct., 1902

MELVILLE, ALEXANDER, c/o Messrs J. A. Millen & Somerville, King street, Tradeston, Glasgow, 20 Feb., 1900

MERCER, JOHN, c/o Mrs M'Culloch, 25 White street, Partick, 22 Oct., 1895

MILLAR, ALEX. SPENCE, Towerlands, Octavia terrace, Greenock, ec., 1902

MILLER, JAMES, 24 Melrose gardens, Kelvinside, Glasgow, 22 Nov., 1898

MILLER, JAMES WILLIAM, 84 Portland place, London, W., 20 Dec., 1898

MILLER, JOHN, Etruria villa, South Govan, 23 Apr., 1889

MILLIKEN, GEORGE, Milton house, Callander, 18 Feb., 1902

MORISON, THOMAS, 50 St. Vincent crescent, Glasgow, 21 Nov., 1899

MORLEY, JAMES STEEL, Auchenhard, by West Calder, 20 Feb., 1900

MORLEY, THOMAS B., B.Sc., 5 Walmer terrace, Ibrox, Glasgow, 27 Oct., 1903

MORTON, W., REID, Strathview, Bearsden, 26 Oct., 1897

MUIR, JAMES H., 76 Hill street, Garnethill, Glasgow, 26 Jan., 1892

MUIRHEAD, WILLIAM, Cloberhill, Knightswood, Maryhill, Glasgow, 28 Apr., 1891

MUNDY, H. L., Ormsby Hall, Alford, Lancs., 24 Oct., 1899

NEIL, ROBERT, 8 Dundrennan road, Langside, Glasgow, 20 Mar., 1900

NEWTON, CHARLES A., c/o Messrs Newton Bros., Market place, Derby, 25 Jan., 1898

NIVEN, JOHN, c/o Messrs Lynch, Basreh, Persian Gulf, 22 Nov., 1898

ORR, Prof. JOHN, B.Sc., South African College, Cape Town, 26 Mar., 1895

PARR, FREDRIK, 16 Eton place, Hillhead, Glasgow, 22 Mar., 1904

PATERSON, JOSEPH BARR, c/o Harvey, 32 White street, Partick, 22 Mar., 1898

PATON, THOMAS, 19 Binnie street, Greenock, 20 Dec., 1892

POLLOCK, GILBERT F., 10 Beechwood drive, Tollcross, Glasgow, 27 Jan., 1891

POLLOK, JOHN, Charing cross, Euston and Hampstead Railway, 39 Chalk Farm road, London, N.W., 22 Feb., 1898

PORTCH, ERNEST C., 37 Vicars hill, Ladywell, Kent, 26 Oct., 1897

PRENTICE, HUGH, Box No. 105, Postal Station B., Cleveland, Ohio, U.S.A., 26 Apr., 1898

PRESTON, JOHN C., 343-5 Sussex street, Sydney, New South Wales, 6 Apr., 1887

RAMSAY, JOHN C., 72 Norse road, Scotstoun, Glasgow, 19 Feb., 1901

REID, DAVID H., Beresford Villa, Ayr, 25 Oct., 1887

REID, HENRY P., 12 Grantly gardens, Shawlands, Glasgow, 20 Dec., 1898

REID, JAMES, 128 Dumbarton road, Glasgow, 22 Oct., 1895

RICHMOND, TOM, 4 Rosemount terrace, Ibrox, Glasgow, 20 Feb., 1900

ROBERTSON, ROBERT M., c/o Mrs Lowe, 11 Nelson street, Greenock, 15 Apr., 1902

ROSS, THOMAS C., Jun., 13 Hampden terrace, Mount Florida, Glasgow, 21 Apr., 1903

SADLER, JOHN, 551 Sauchiehall street, Glasgow, 23 Oct., 1900

SANGUINETTI, W. ROGER, Public Works Department, Selangor, Malay States, 20 Feb., 1900

SAYERS, W. H., 19 Mar., 1901

SCOTT, G. N., 7 Corunna street, Glasgow, 17 Feb., 1903

SELLERS, FREDERICK WREFORD BRAGGE, 34 Sardinia terrace, Hillhead, Glasgow, 26 Apr., 1904

SEMPLE, JOHN SCOTT, Coral bank, Bertrohill road, Shettleston, 26 Apr., 1904

SEMPLE, WILLIAM, Coral Bank, Bertrohill road, Shettleston, 21 Jan., 1902

SERVICE, WILLIAM, 173 West Graham street, Glasgow, 26 Nov., 1901

SEXTON, GEORGE A., c/o Prof. Sexton, G. & W. of S. Technical College, Glasgow, 24 Nov., 1896

SHARP, JAMES R., c/o Dargie, 26 Clifford street, Ibrox, Glasgow, 24 Oct., 1899

SHARPE, WILLIAM, B.Sc., Engineer-in-Chief's office, Natal Government Railway, Maritzburg, Natal, 24 Dec., 1895

SIBBALD, THOMAS KNIGHT, c/o Messrs Cook & Son, Ltd., Cairo, Egypt, 26 Oct., 1897

SIMPSON, ADAM, 12 Rupert street, Glasgow, W., 3 May, 1904

SLOAN, JOHN ALEXANDER, 37 Annette street, Crosshill, Glasgow, 25 Jan., 1898

SMITH, ALEXANDER, 69 High street, Kinghorn, 24 Dec., 1901

SMITH, CHARLES, 3 Rosemount terrace, Ibrox, Glasgow, 24 Apr., 1894

SMITH, GEORGE F., 373 Broad Street Station, Pennsylvania Railroad Co., Philadelphia, U.S.A., 26 Oct., 1897

SMITH, JAMES, 44 Cleveland street, Glasgow, 31 Oct., 1902

SMITH, JAMES, Jun., Darley, Milngavie,	27 Oct., 1903
SMITH, WILLIAM, 13 Minerva street, Glasgow,	28 Apr., 1903
SPROUL, JOHN, 13 Greenlaw avenue, Paisley,	3 Mar., 1903
STEVEN, DAVID M., 9 Princes terrace, Dowanhill, Glasgow,	15 June, 1898
STEVENS, CLEMENT H., c/o Messrs Blandy Bros. & Co., Las Palmas, Grand Canary,	22 Dec., 1891
STEVENSON, ALLAN, 108 Dundrennan road, Langside, Glasgow,	26 Nov., 1901
STEVENSON, GEORGE, c/o Chalmers, Wellpark, Larbert,	24 Apr., 1900
STEVENSON, WILLIAM, Bank Chambers, Sandhill, Newcastle-on-Tyne,	25 Jan., 1881
SWAN, JAMES, 1536 Pine street, Philadelphia, U.S.A.,	23 Mar., 1897
TAYLOR, ANDREW P., 47 St. Vincent crescent, Glasgow,	19 Dec., 1899
TAYLOR, JOHN DOUGLAS, Jeanieslea, Oxhill road, Dumbarton,	26 Apr., 1904
THOMAS, NEVILL SENIOR, 3 Church road, Penarth, near Cardiff,	24 Mar., 1903
THOMSON, GRAHAME H., Jun., 2 Marlborough terrace, Glasgow,	22 Feb., 1898
TOD, WILLIAM, c/o Rennie, 8 Franklin terrace, Glasgow,	22 Feb., 1898
WALLACE, HUGH, Jun., Nantglyn, Coventry,	24 Oct., 1899
WARD, G. K., Rockvilla, Dumbarton,	23 Apr., 1901
WARD, JOHN, Jun., Rockvilla, Dumbarton,	23 Apr., 1901
WATSON, JAMES, 35 Regent Moray street, Glasgow,	24 Dec., 1901
WATSON, JOHN, c/o Alexander Fleming, Esq., 9 Woodside crescent, Glasgow,	22 Nov., 1898
WILLIAMSON, ALEXANDER, Craigbarnet, Greenock,	20 Nov., 1900
WILLIAMSON, GEORGE TAYLOR, Craigbarnet, Greenock,	22 Mar., 1904
WILLIAMSON, EDWARD H., 214 Langlands road, South Govan,	27 Oct., 1903
WILSON, THOMAS, 66 Alexandra parade, Glasgow,	20 Feb., 1900
WINDELER, GEORGE EDWARD, The Mirrlees Watson Co., Glasgow,	31 Oct., 1902
WITHY, VIVIAN, Kenmore, Bowling Green terrace, Whiteinch, Glasgow,	31 Oct., 1902
WORK, JOHN C., 6 Parkgrove terrace, Glasgow,	22 Mar., 1904
YOUNG, GEORGE M., B.Sc., 268 Kenmure street, Pollokshields, Glasgow,	24 Dec., 1901
YOUNG, JAMES M., Auldfield place, Pollokshaws, Glasgow,	22 Jan., 1901
YOUNG, J. M., Ravenscraig, Ardrossan,	17 Feb., 1903
YOUNG, JOHN, Jun., c/o Messrs Wallsend Slipway and Engineering Co., Ltd., Wallsend-on-Tyne,	23 Nov., 1897
YOUNGER, JOHN, Birch Bank, 88 Albert road, Crosshill, Glasgow,	3 Mar., 1903

INDEX.

Abstract of "House Expenditure" Account, - - - - - - 322
Action of Radium on Living Tissues, - - - - - - - 166
Advantages of Superheating, - - - - - - - - - - 17
Allan, Sir William, Memoir of, - - - - - - - - - 334
An Inquiry Regarding the Marine Propeller—by Mr. J. Millen Adam, - - - - - - - - - - - - - 134
The Helical Screw Propeller, - - - - - - - - - 135
Problem of the Propeller, - - - - - - - - - - 139
Geometry of the Screw Propeller, - - - - - - - - 141
The Conic Propeller, - - - - - - - - - - - 145
Discussion, - - - - - - - - - - - - - - 149
Anniversary Dinner, "James Watt," - - - - - - - - 286
Annual Report of the Council, - - - - - - - - 293, 312
Annual Subscriptions, - - - - - - - - - - - 332
Application of Integraph to Ship Calculations, - - - - - 196
Articles of Association, - - - - - - - - - - - xi.
Associate Members, List of, - - - - - - - - - - 382
Associates, Deceased, - - - - - - - - - - - 343
Associates, List of, - - - - - - - - - - - - 387
Awards of Books, - - - - - - - - - - - - 293, 309

Balance Sheet, - - - - - - - - - - - - - - 320
Bertheau Engine, - - - - - - - - - - - - - 105
Board of Governors of Glasgow School of Art, - - - - - 315
Board of Governors of Glasgow and West of Scotland Technical College, - - - - - - - - - - - - - - 316
Board of Trade Consultative Committee, - - - - - - 314
Books Added to Library by Purchase, - - - - - - - 324
Brown, John, Memoir of, - - - - - - - - - - 343
Bye-Laws, - - - - - - - - - - - - - - - xxix.

Carburetter, - - - - - - - - - - - - - - 242
Centre of Buoyancy Curve, - - - - - - - - - - 197
Chairman's Address, - - - - - - - - - - - - 1
Characteristic of Hewitt Lamp, - - - - - - - - - 193
Collie, Charles, Memoir of, - - - - - - - - - - 336
Conic Propeller, - - - - - - - - - - - - 145
Contents, - - - - - - - - - - - - - - - v.

Conversazione, - - - - - - - - - - - - - 285
Cooling Arrangements for Motor Cars, - - - - - - - 249
Correspondence—
Mr. H. W. Andrews—Superheated Steam, 53.—Professor A. Barr—Motor Cars, 272.—Mr. A. S. Biggart—Motor Cars, 276.—Prof. Storm Bull—Superheated Steam, 76.—Mr. E. G. Constantine—Superheated Steam, 54.—Mr. H. Cruse—Superheated Steam, 66.—Mr. S. Griffin—Marine Propellers with Non-Reversible Engines and Internal Combustion Engines, 113.—Mr. W. S. Hide—Superheated Steam, 62.—Mr. Edwin H. Judd—Superheated Steam, 57.—Mr. Rankin Kennedy—Motor Cars, 277.—Mr. Charles S. Lake—Improvements in Valve-Gears, 93.—Mr. Robert Lang—Experiments with Rapid Cutting Steel Tools, 186.—Mr. P. F. MacCallum—Marine Propellers with Non-Reversible Engines and Internal Combustion Engines, 122.—Mr. C. A. Matthey—Marine Propellers with Non-Reversible Engines and Internal Combustion Engines, 116.—Mr. R. T. Napier—Marine Propellers with Non-Reversible Engines and Internal Combustion Engines, 124.—Herr Hans Reisart—Superheated Steam, 74.—Mr. F. J. Rowan—Experiments with Rapid Cutting Steel Tools, 185.—Mr. A. Scott Younger—Superheated Steam, 60.
Council Report, - - - - - - - - - - - - 312
Courtier-Dutton, W. T., Memoir of, - - - - - - - 336
Crawford, Samuel, Memoir of, - - - - - - - - - 336
Curves of Integrated Sections, - - - - - - - - 197

Davies, Charles Merson, Memoir of, - - - - - - - 337
Deceased, Associates, - - - - - - - - - - 343
Deceased, Members, - - - - - - - - - - - 333
Deceased, Students, - - - - - - - - - - - 344
Deflection of a Ship, - - - - - - - - - - - 201
Designs of Superheaters, - - - - - - - - - - 9
Diamond Crossings, - - - - - - - - - - - 224
Discussion on Papers—
Remarks by Mr. J. Millen Adam—An Inquiry Regarding the Marine Propeller, 157.—Mr. Daniel Adamson—Experiments with Rapid Cutting Steel Tools, 182.—Mr. James Andrews—Improvements in Valve-Gears, 90.—Mr. Robert Baillie—Superheated Steam, 38.—Prof. A. Barr—Uses of the Integraph in Ship Calculations, 218.—Mr. A. S. Biggart—Superheated Steam, 36.—Prof. J. H. Biles—Improvements in Valve Gears, 95; An Inquiry Regarding the Marine Propeller, 162; Experiments with Rapid Cutting

Steel Tools, 190.—Mr. E. Hall-Brown—Superheated Steam, 83; Improvements in Valve-Gears, 88; Marine Propellers with Non-Reversible Engines and Internal Combustion Engines, 151, 160; Modern Appliances connected with Railway Crossings and Points, 239; Motor Cars, 271, 284.—Mr. W. A. Chamen—Superheated Steam, 52.—Mr. Alexander Cleghorn—Superheated Steam, 35; Improvements in Valve-Gears, 89.—Mr. James Coats—Motor Cars, 270.—Mr. E. G. Constantine—Experiments with Rapid-Cutting Steel Tools, 178.—Mr. Charles Day—Experiments with Rapid Cutting Steel Tools, 189.—Mr. E. E. Doddrell—Superheated Steam, 33.—Mr. C. S. Douglas—Uses of the Integraph in Ship Calculations, 208.—Mr. James Gilchrist—Uses of the Integraph in Ship Calculations, 222.—Mr. Alexander Govan—Motor Cars, 281.—Prof. A. Jamieson—Superheated Steam, 44.—Mr. John G. Johnstone—An Inquiry Regarding the Marine Propeller, 155; Uses of the Integraph in Ship Calculations, 219.—Mr. Rankin Kennedy—Marine Propellers with Non-Reversible Engines and Internal Combustion Engines, 126.—Mr. W. J. Luke—Uses of the Integraph in Ship Calculations, 215, 219, 222.—Mr. W. M'Whirter—Motor Cars, 268.—Mr. T. Blackwood Murray—Marine Propellers with Non-Reversible Engines and Internal Combustion Engines, 109; Motor Cars, 261.—Mr. R. T. Napier—An Inquiry Regarding the Marine Propeller, 151.—Mr. George W. Reid—Modern Appliances connected with Railway Crossings and Points, 234.—Mr. W. H. Riddlesworth—Uses of the Integraph in Ship Calculations, 212.—Mr. John Riekie—Superheated Steam, 29; Improvements in Valve-Gears, 93; An Inquiry Regarding the Marine Propeller, 149; Modern Appliances connected with Railway Crossings and Points, 236; Motor Cars, 267.—Mr. F. J. Rowan—Superheated Steam, 79; Modern Appliances connected with Railway Crossings and Points, 237.—Mr. G. C. Thomson—Motor Cars, 271.—Prof. W. H. Watkinson—Superheated Steam, 25.—Mr. Owen R. Williams—Modern Appliances connected with Railway Crossings and Points, 237; Motor Cars, 269.

Displacement Curve, - - - - - - - - - - - 197
Donations to the Library, - - - - - - - - - 323
Duncan, James G., Memoir of, - - - - - - - - 344
Duration of Trials with Rapid-Cutting Steel Tools, - - - 172

Efficiency of Hewitt Lamp, - - - - - - - - - 19
Election of Office-Bearers, - - - - - - - - - 308

Experiments with Rapid-Cutting Steel Tools—By Mr. CHARLES DAY 170
Nature of Tests, - - - - - - - - - - - 170
Material operated on, - - - - - - - - - - 171
Size of Cuts, - - - - - - - - - - - 171
Duration of Trials, - - - - - - - - - - 172
Description of Lathe, - - - - - - - - - 172
Results, - - - - - - - - - - - - 172
Discussion, - - - - - - - - - - - - 178

Ferrier, James, Memoir of, - - - - - - - - - - 338
Fox, Samson, Memoir of, - - - - - - - - - - 339
Friction Clutch, - - - - - - - - - - - 250

Gale, James, Memoir of, - - - - - - - - - - 333
Gear Box, - - - - - - - - - - - - 252

Hand Levers for Railway Points, - - - - - - - - 229
Helical Screw Propeller, - - - - - - - - - 135
Hewitt Lamp, Description of, - - - - - - - - 192
Honorary Members, List of, - - - - - - - - 346
"House Expenditure" Account, - - - - - - - - 322

Ignition, - - - - - - - - - - - - 244
Improvements in Valve-Gears—By Mr. JOHN RIEKIE, - - - 84
Necessity for Improvement in Valve-Gears, - - - - 86
Discussion, - - - - - - - - - - - - 88
Index, - - - - - - - - - - - - 397
Integraph, Description of, - - - - - - - - - 204
Integraph, Principle of the, - - - - - - - - - 205

"James Watt" Dinner, - - - - - - - - - - 286

King, Donald, Memoir of, - - - - - - - - - - 340

Libraries, etc., which receive the Institution's Transactions, - 328
Library, Books added to by Purchase, - - - - - - - 324
Library Committee, Report of, - - - - - - - - - 323
,, Donations to, - - - - - - - - - - 323
,, Periodicals received at, - - - - - - - - 329
,, Recommendation Book, - - - - - - - - 331
List of Members, - - - - - - - - - - - 346
Lloyd's Technical Committee - - - - - - - - - 314
Lowe, Robert, Memoir of, - - - - - - - - - - 345
Lubrication for Motor Cars, - - - - - - - - - 248

MacKinnon, James D., Memoir of, - - - - - - - - 340

Mann, William, Memoir of, - - - - - - - - - - 344
Marine Propellers with Non-Reversible Engines and Internal Combustion Engines—By Mr. RANKIN KENNEDY, - - 96
Systems of Propulsion, - - - - - - - - - - 96
Water-jet Propulsion, - - - - - - - - - - 100
Bertheau Oil Engine, - - - - - - - - - - 105
Thorneycroft Motor Boat, - - - - - - - - - 107
Discussion, - - - - - - - - - - - - 109
Members, Associate, List of, - - - - - - - - - 382
Members, Deceased, - - - - - - - - - - - 333
Members, Honorary, - - - - - - - - - - - 346
Members, List of, - - - - - - - - - - - 346
Memorandum of Association, - - - - - - - - - ix.
Metric Weights and Measures, Petition in favour of, - - - 306
Minutes of Proceedings, - - - - - - - - - - 293
Mirrlees, James Buchanan, Memoir of, - - - - - - 341
Moment of Inertia Calculation, - - - - - - - - 201
Motor Cars—By Mr. ALEXANDER GOVAN, - - - - - - 240
Petrol, - - - - - - - - - - - - - 241
Carburetter, - - - - - - - - - - - - 242
Ignition, - - - - - - - - - - - - 244
The Engine, - - - - - - - - - - - - 245
Lubrication, - - - - - - - - - - - 248
Cooling Arrangements, - - - - - - - - - 249
Friction Clutch, - - - - - - - - - - - 250
Gear Box, - - - - - - - - - - - - 252
Frames, - - - - - - - - - - - - 255
Axles, Wheels, and Tyres, - - - - - - - - - 257
Conclusion, - - - - - - - - - - - 258
Discussion, - - - - - - - - - - - - 261

Necessity for Improvements in Valve Gears, - - - - - - 86
Neilson, James, Memoir of, - - - - - - - - - 341
New Books Added to Library, - - - - - - - - - 324

Office-Bearers, Election of, - - - - - - - - - 308
Obituary, - - - - - - - - - - - - - 333

Periodicals Received at Library, - - - - - - - - 329
Petition in Favour of Metric Weights and Measures, - - - 306
Petrol, - - - - - - - - - - - - - 241
Premiums of Books, - - - - - - - - vii., 293, 309
Presidents of the Institution, - - - - - - - - - iv.
Problem of the Screw Propeller, - - - - - - - - 139
Proceedings, Minutes of, - - - - - - - - - - 293

Propeller Conic, - - - - - - - - - - - - - 145
Propeller, Geometry of the, - - - - - - - - - - 141
Propeller, The Helical Screw, - - - - - - - - - - 135
Properties of Integral Curves, - - - - - - - - - - 206

Radium and its Properties—By Dr. JOHN MACINTYRE, - - - - 163
History of the Discovery of Radium, - - - - - - 164
Action of Radium on Living Tissues, - - - - - - 166
Report of the Council, - - - - - - - - - - - 312
Report of the Library Committee, - - - - - - - - 323
Results of Trials with Rapid Cutting Steel Tools, - - - - - 172

Societies Exchanging Transactions with the Institution, - - - 327
Some Modern Appliances Connected with Railway Crossings and Points—By Mr. OWEN R. WILLIAMS, B.Sc., - - - - - 224
Diamond Crossings, - - - - - - - - - - - 224
Hand Levers for Points, - - - - - - - - - - 229
Spring Design Switch Levers, - - - - - - - - - 231
Discussion, - - - - - - - - - - - - - - 234
Stability Calculations, - - - - - - - - - - - 202
Strength Calculations, - - - - - - - - - - - 199
Students, Deceased, - - - - - - - - - - - - 344
Students, List of, - - - - - - - - - - - - 390
Subscriptions, Annual, - - - - - - - - - - - 332
Superheated Steam—By Mr. F. J. ROWAN, - - - - - - - 4
Historical, - - - - - - - - - - - - - 4
Designs of Superheaters, - - - - - - - - - 9
Use of Superheated Steam, - - - - - - - - - 15
Theoretical Advantages of Superheating, - - - - - - 17
Discussion, - - - - - - - - - - - - - - 25
Systems of Propulsion, - - - - - - - - - - - 96

Tests with Rapid Cutting Steel Tools, - - - - - - - - 170
The Hewitt Mercury Vapour Lamp—By Prof. MAGNUS MACLEAN, M.A., D.Sc., - - - - - - - - - - - - - 192
Introduction, - - - - - - - - - - - - - 192
Description of Hewitt Lamp, - - - - - - - - - 192
Characteristic and Efficiency, - - - - - - - - - 193
Colour, - - - - - - - - - - - - - - 194
Life, - - - - - - - - - - - - - - - 194
The Uses of the Integraph in Ship Calculations—By Mr. JOHN G. JOHNSTONE, B.Sc., - - - - - - - - - - - 195
Application to Ship Calculations, - - - - - - - - 196
Stability Calculations, - - - - - - - - - - 202
Description of the Integraph, - - - - - - - - - 204
Principle of the Integraph, - - - - - - - - - 205

Properties of the First Three Integral Curves, - - - - 206
Discussion, - - - - - - - - - - - - - 208
Theoretical Advantages of Superheating, - - - - - - 17
Treasurer's Statement, - - - - - - - - - - - 319

Use of Superheated Steam, - - - - - - - - - - 15

Valve-Gears, Necessity for Improvement in, - - - - - - 86

Water-jet Propulsion, - - - - - - - - - - - 100
Wilson, John, Memoir of, - - - - - - - - - - 342

Mau

Fig. 4.

PLAN.

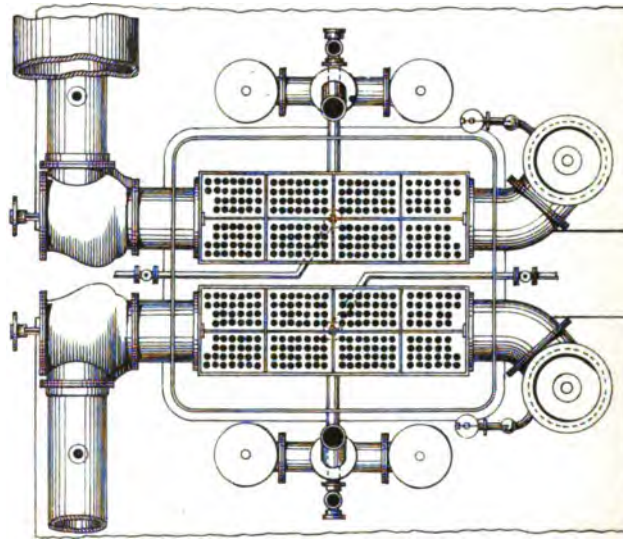

TRANSVERSE SECTION

Fig. 8.

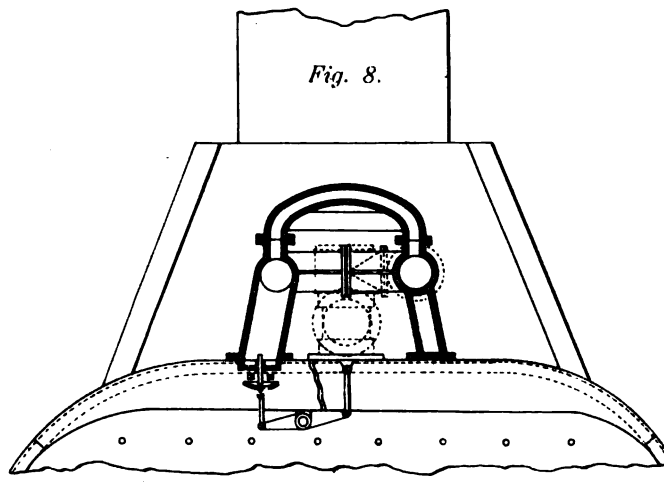

LEGGAT BROS.
ENGINEERING LITHOGRAPHERS, GLASGOW

ELEVATION.

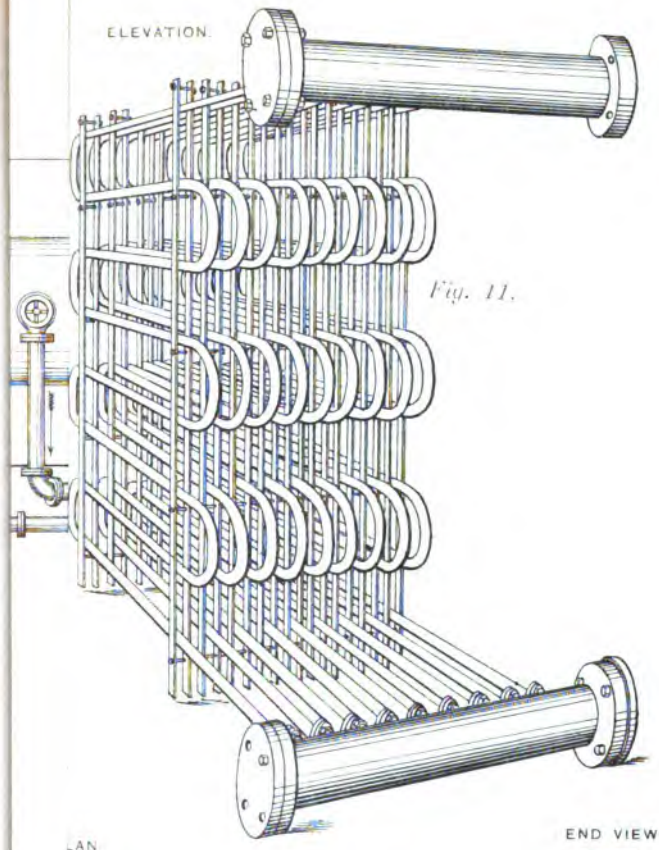

Fig. 11.

PLAN

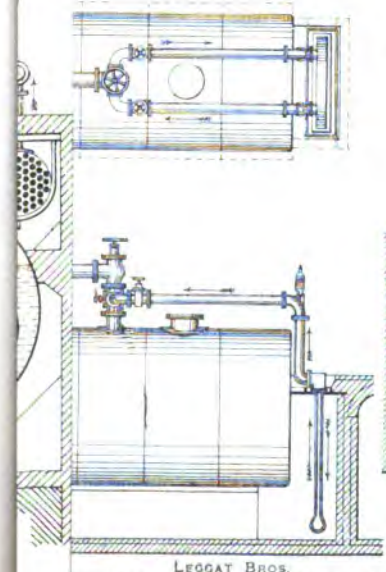

Fig. 13

END VIEW

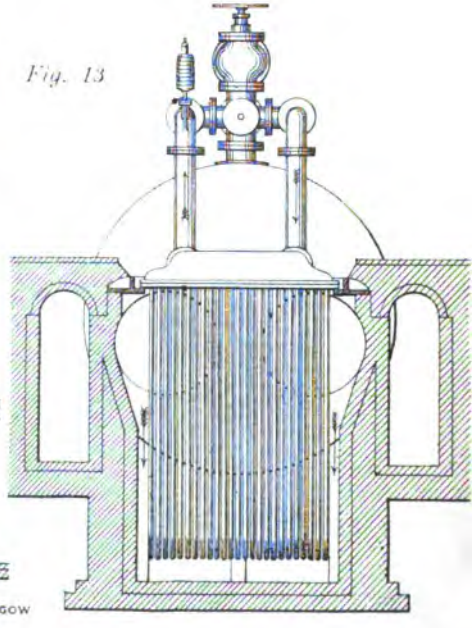

LEGGAT BROS.
ENGINEERING LITHOGRAPHERS GLASGOW

PLATE III.

Fig. 16.

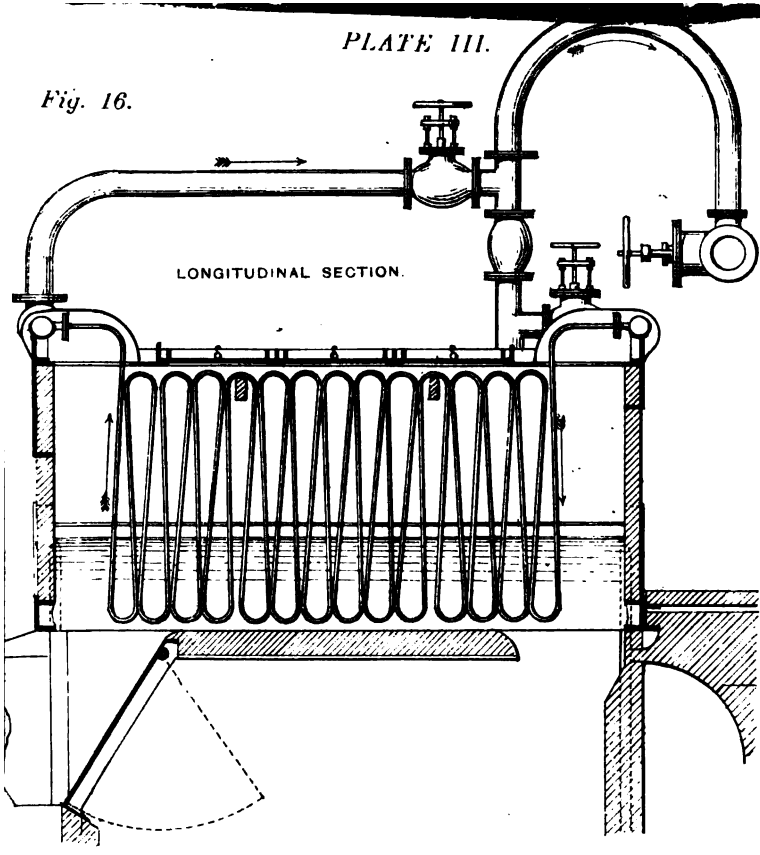

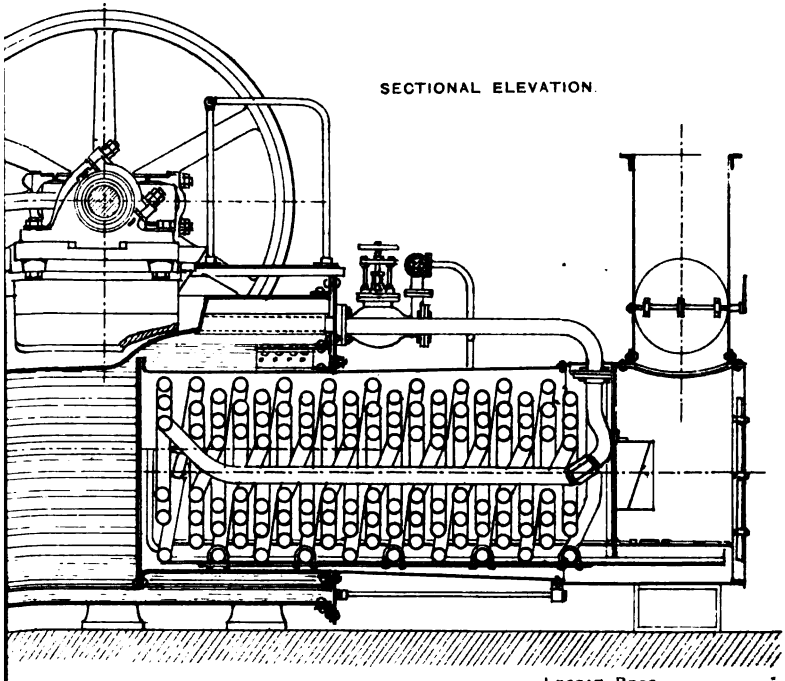

LEGGAT BROS.
ENGINEERING LITHOGRAPHERS GLASGOW.

L ELEVATION.

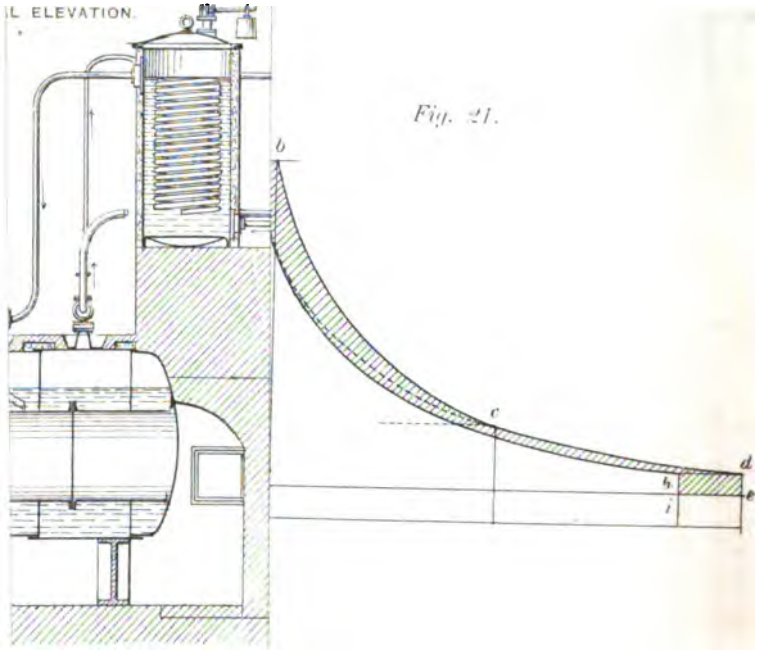

Fig. 21.

TRANSVERSE SECTION.

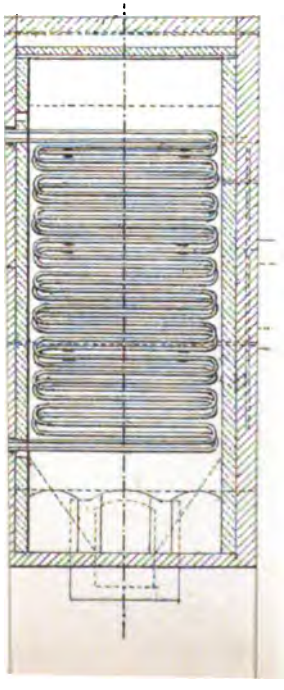

Fig. 22.

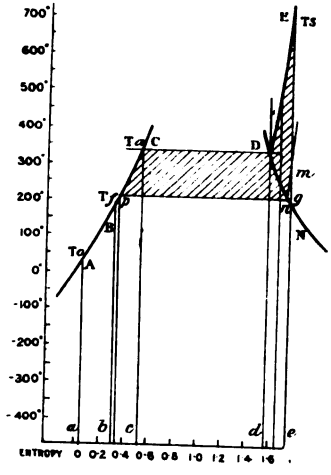

...GCAT BROS.
ENGINEERING LITHOGRAPHERS GLASGOW

Fig. 4.

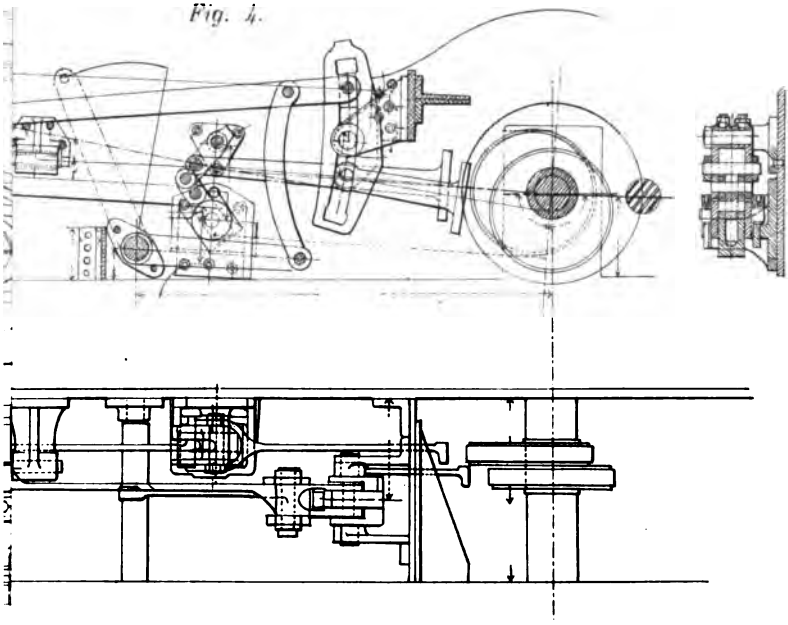

Fig. 5

FIGURES SHEWING MOVEMENTS OF PINS A, B, & C.

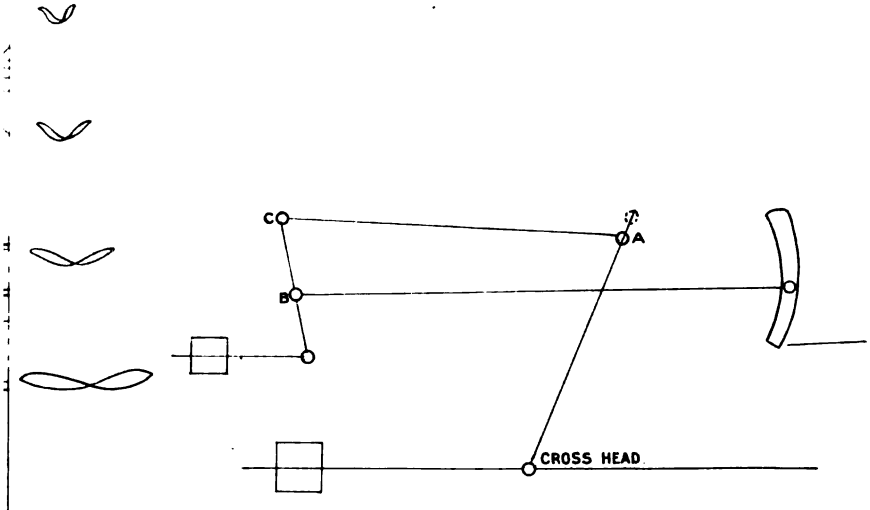

LEGGAT BROS
ENGINEERING LITHOGRAPHERS GLASGOW

PLATE VI.

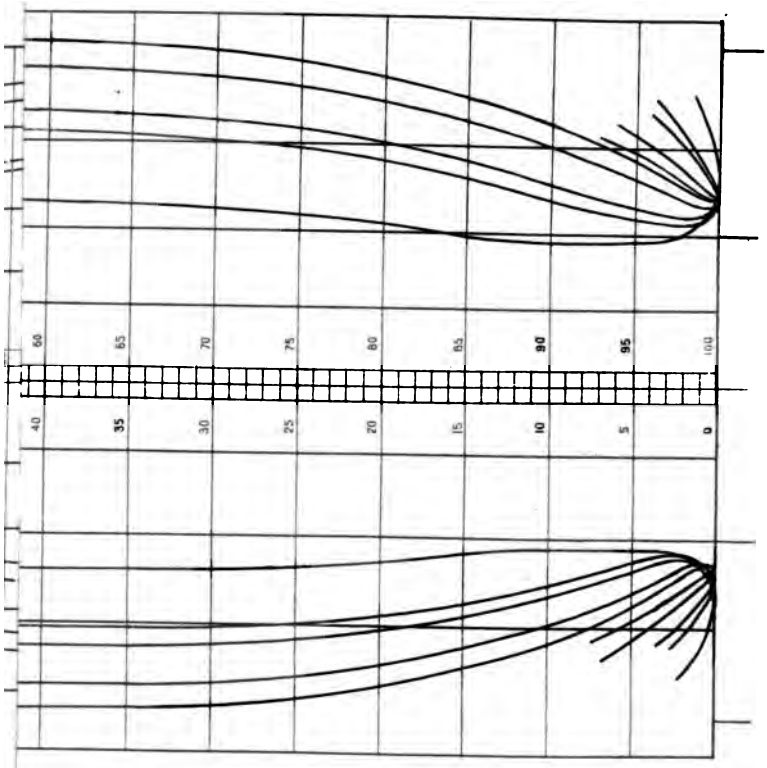

LEGGAT BROS.
ENGINEERING LITHOGRAPHERS, GLASGOW

Fig. 3.

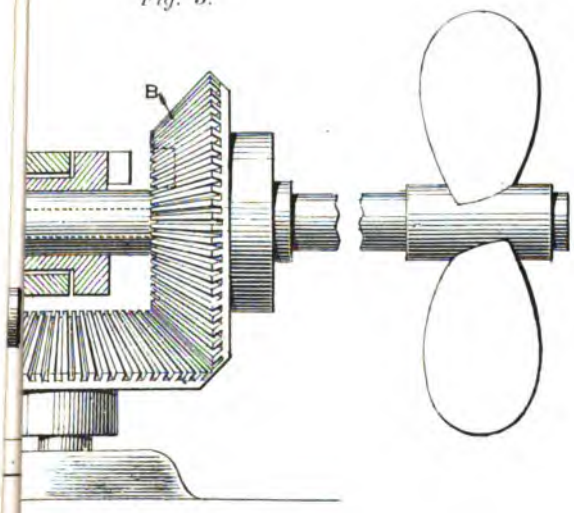

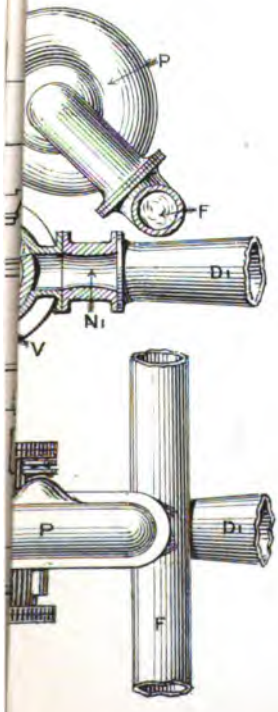

Fig. 9.

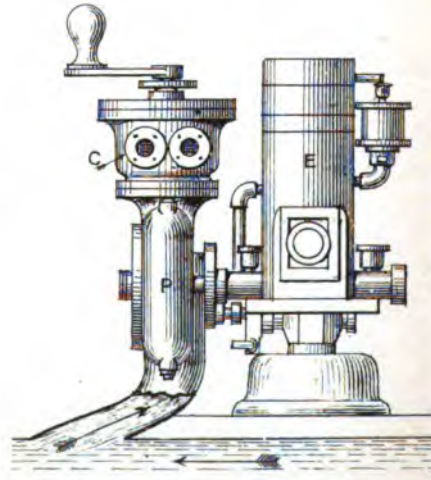

LEGGAT BROS.
ENGINEERING LITHOGRAPHERS. GLASGOW

IEVERSIBLE ENGINES
BY MR. RANKIN KENNEDY. *PLATE VIII.*

Fig. 11.

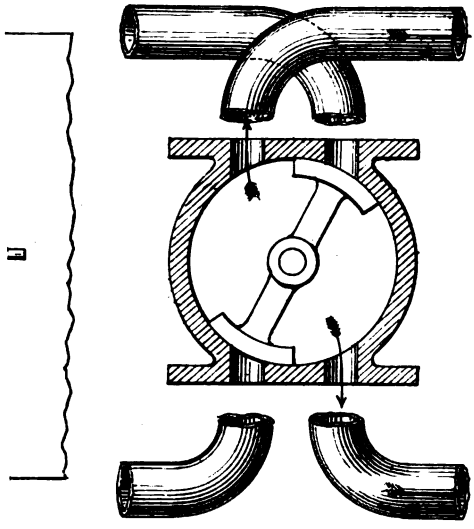

2.

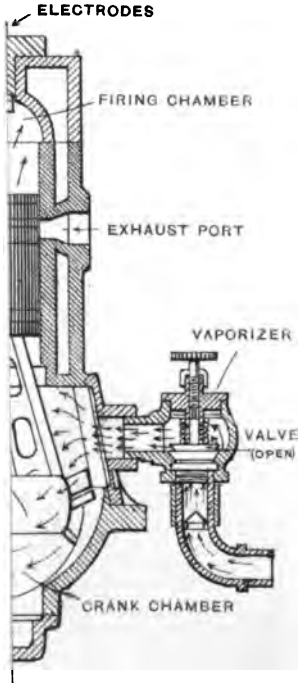

7'8

LEGGAT BROS.
ENGINEERING LITHOGRAPHERS, GLASGOW.

Fig. 5.

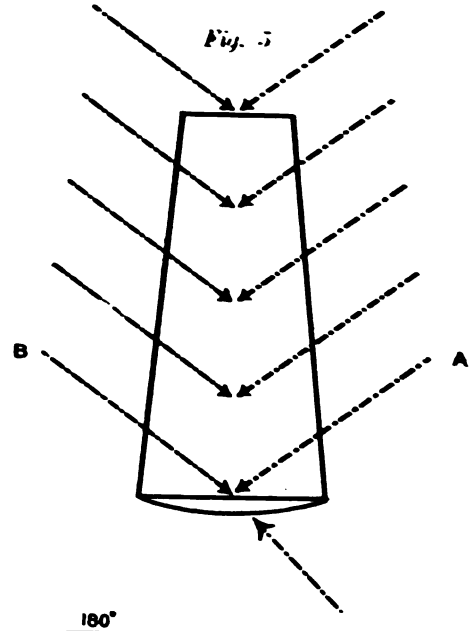

Fig. 9.

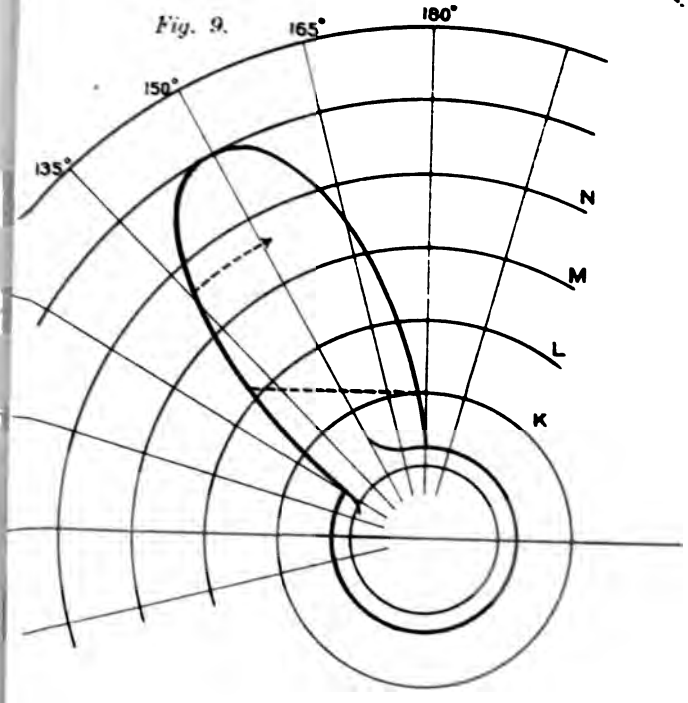

LEGGAT BROS.
ENGINEERING LITHOGRAPHERS, GLASGOW

Fig. 15.

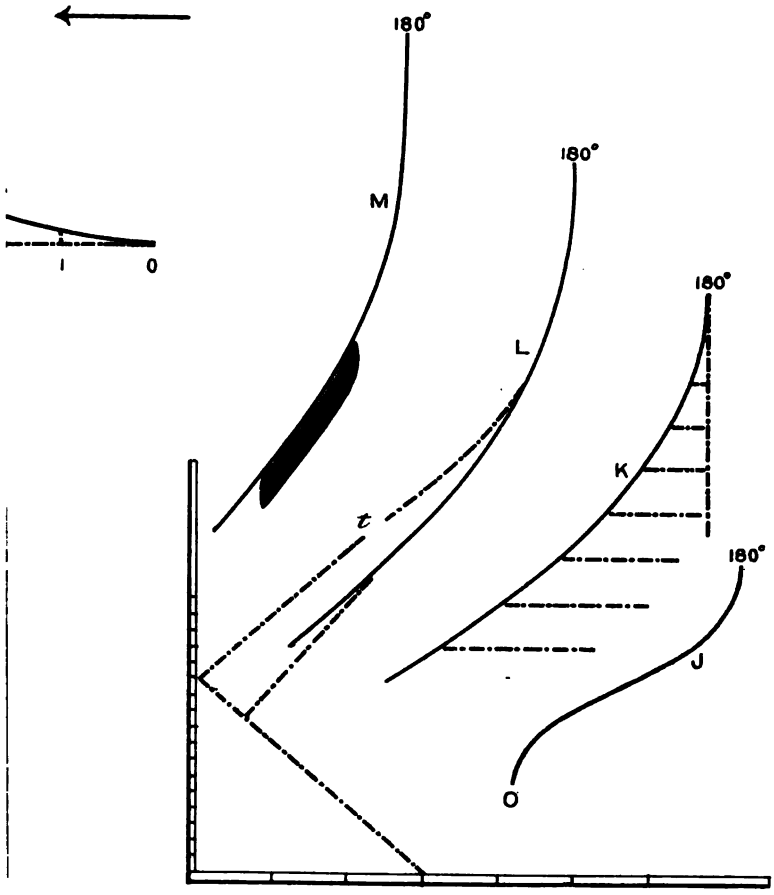

LEGGAT BROS.
ENGINEERING LITHOGRAPHERS, GLASGOW

Fig. 18.

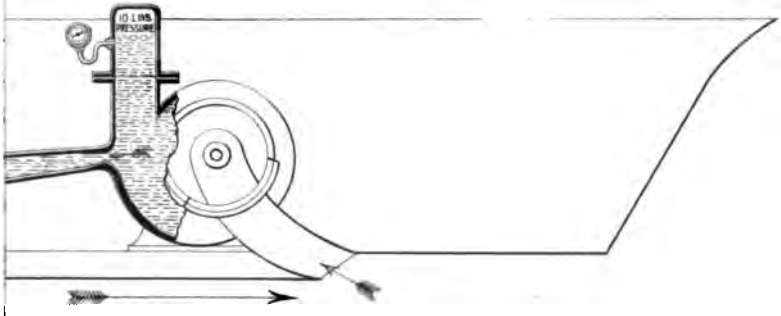

LEGGAT BROS.
ENGINEERING LITHOGRAPHERS. GLASGOW.

Fig. 2.

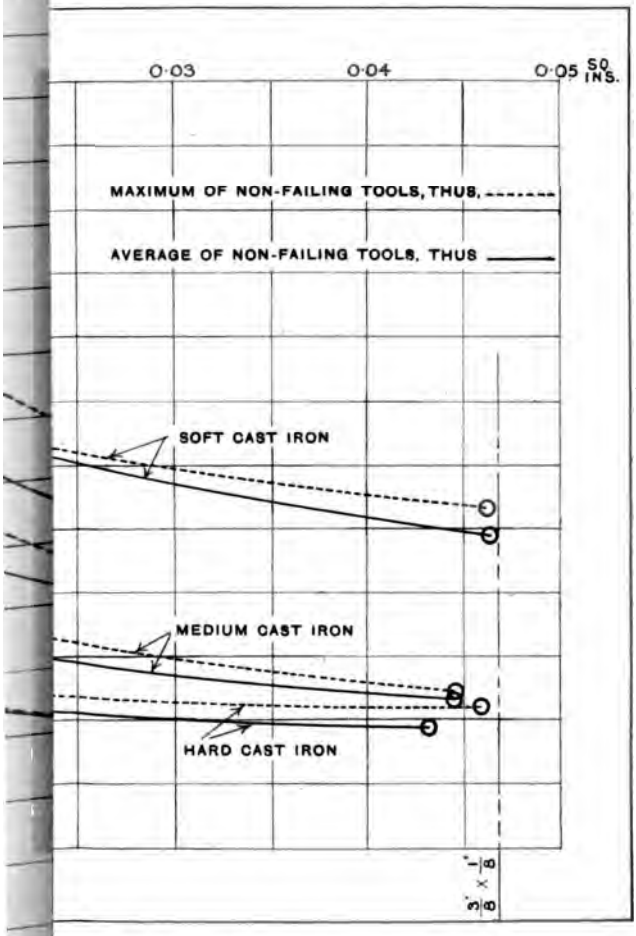

(CUT BY TRAVERSE)

PEED WITH AREA OF CUT (CAST IRON)

LEGGAT BROS.
ENGINEERING LITHOGRAPHERS, GLASGOW.

Fig. 3.

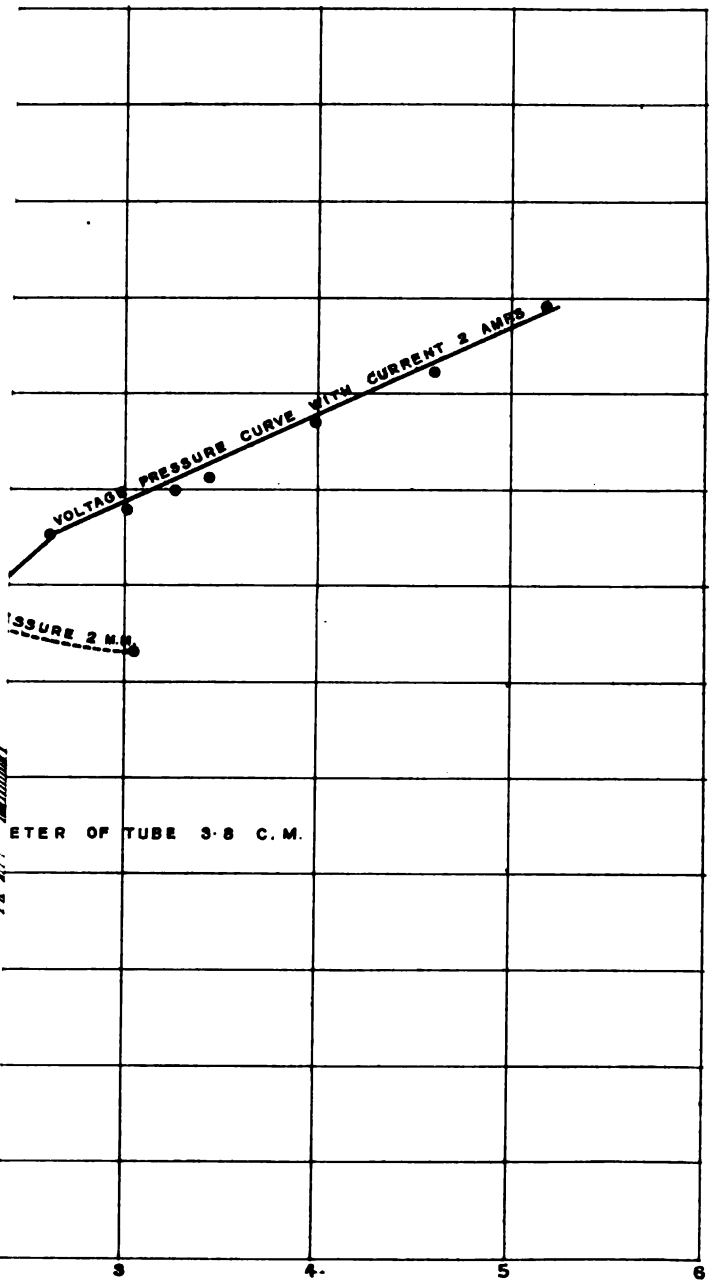

LEGGAT BROS.
ENGINEERING LITHOGRAPHERS, GLASGOW.

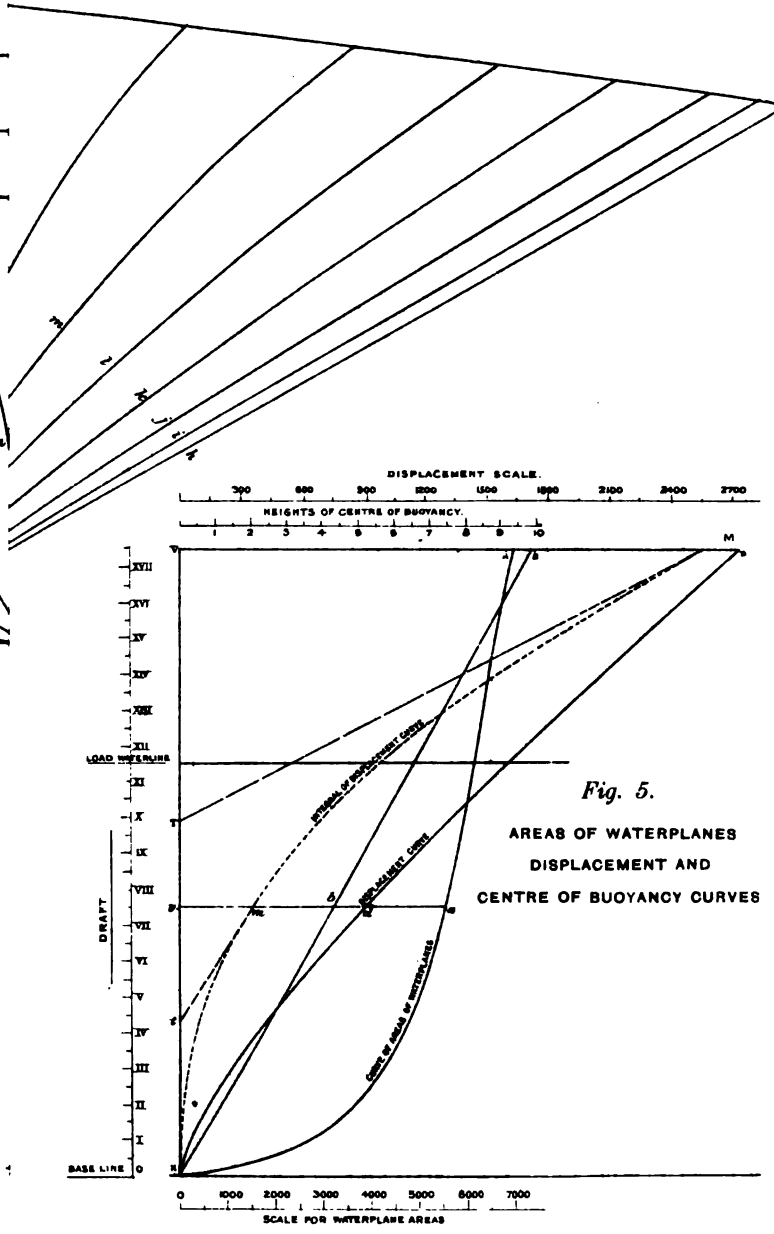

Fig. 5.

AREAS OF WATERPLANES
DISPLACEMENT AND
CENTRE OF BUOYANCY CURVES

LEGGAT BROS.
ENGINEERING LITHOGRAPHERS, GLASGOW

Fig. 8.

MOMENT OF INERTIA OF EQUIVALENT GIRDER.

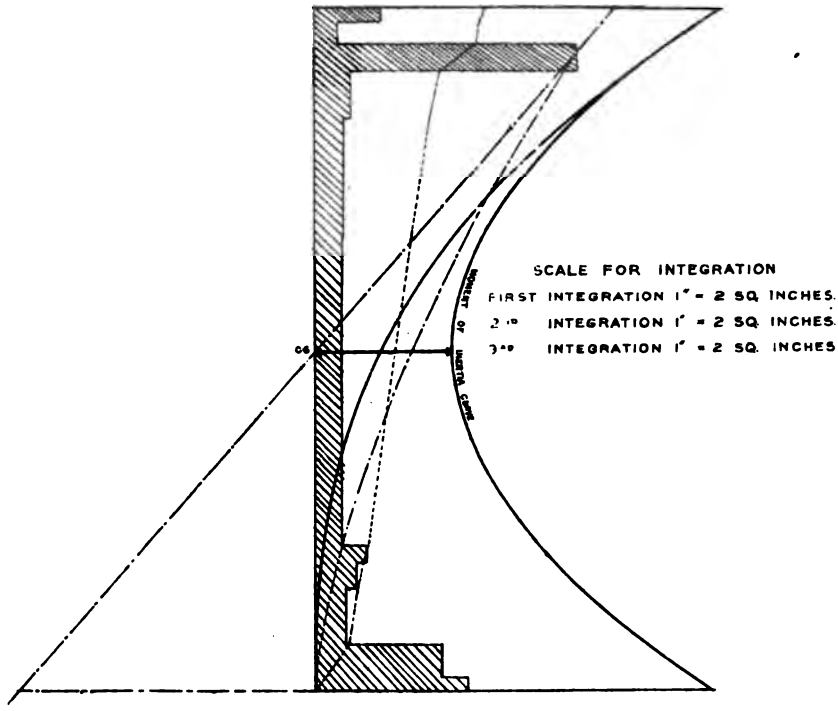

LEGGAT BROS.
ENGINEERING LITHOGRAPHERS GLASGOW

T CURVES

Fig. 13.

"ISOCLINES" AND "ISOVOLS."

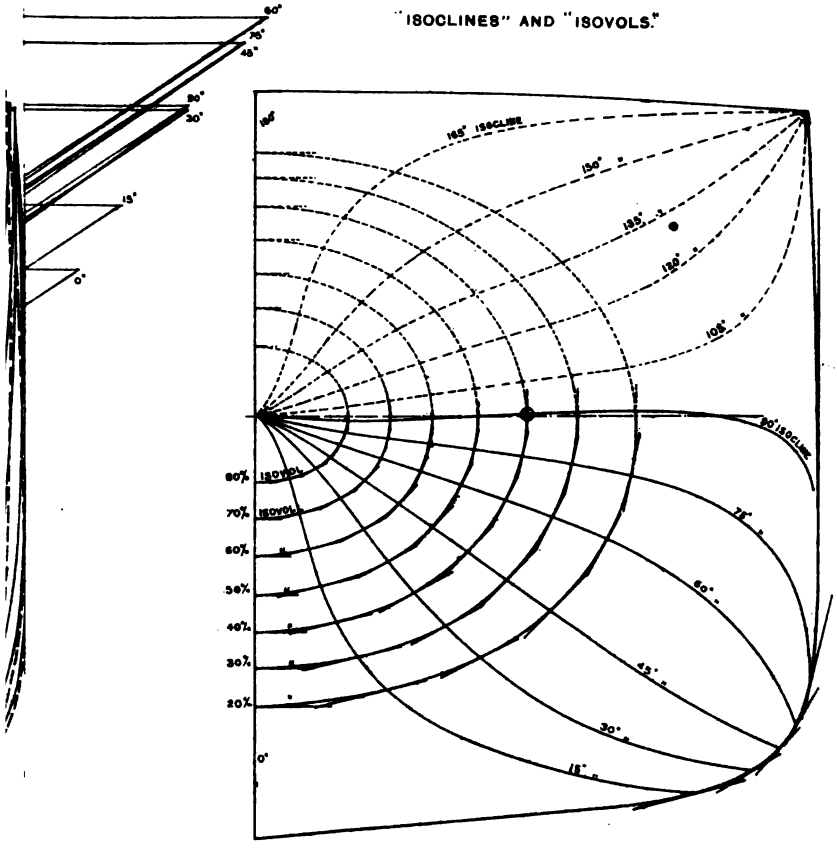

LEGGAT BROS.
ENGINEERING LITHOGRAPHERS. GLASGOW.

Fig. 2.

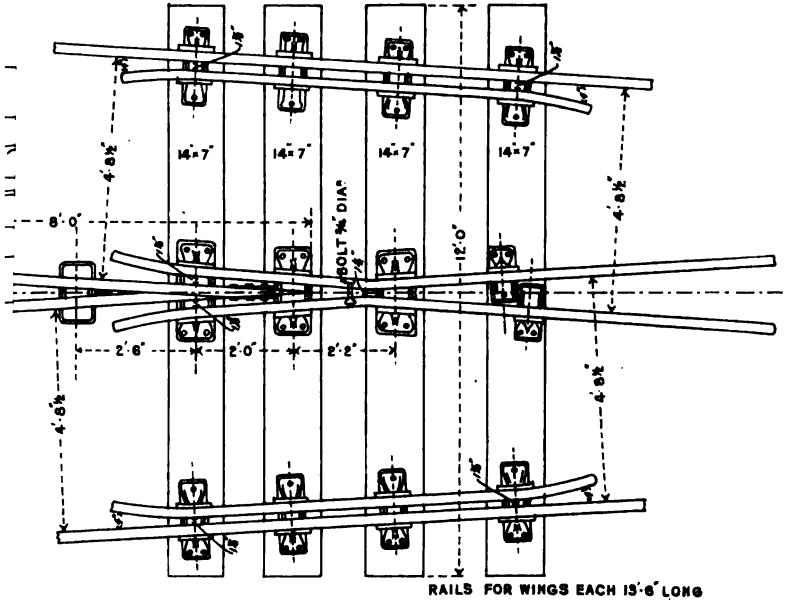

ACUTE-ANGLED CROSSING 1 IN 8

Fig. 5.

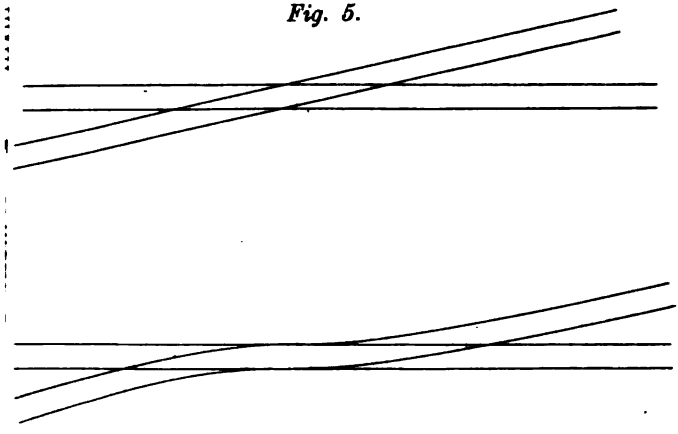

LEGGAT BROS.
ENGINEERING LITHOGRAPHERS, GLASGOW.

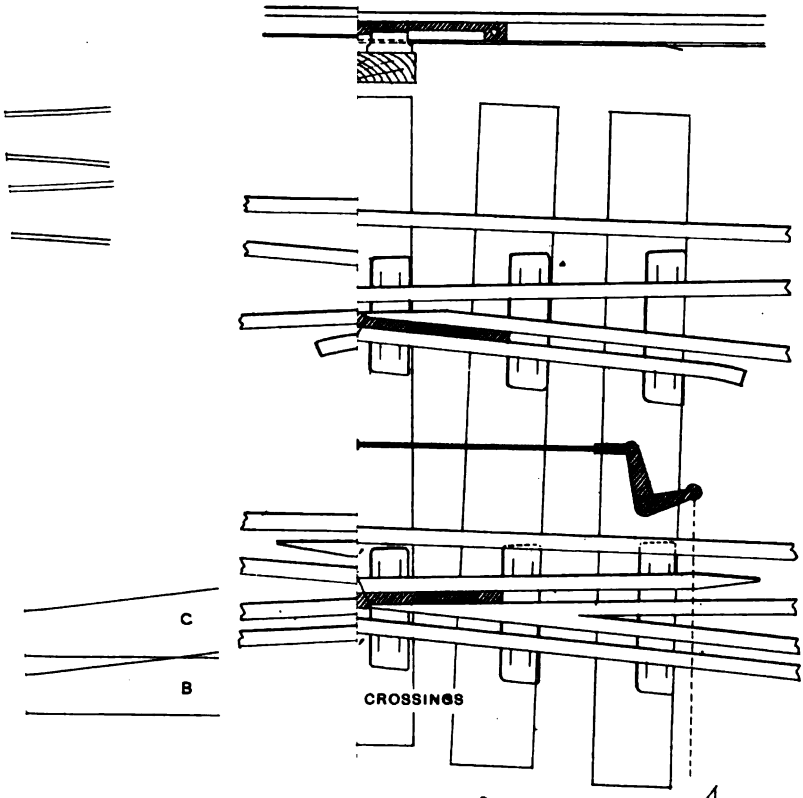

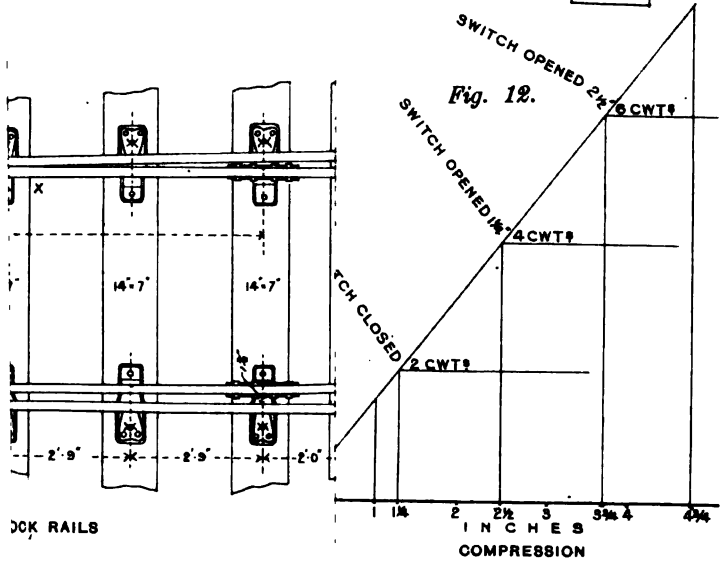

OCK RAILS

Fig. 12.

LEGGAT BROS.
ENGINEERING LITHOGRAPHERS, GLASGOW.

Fig. 16.

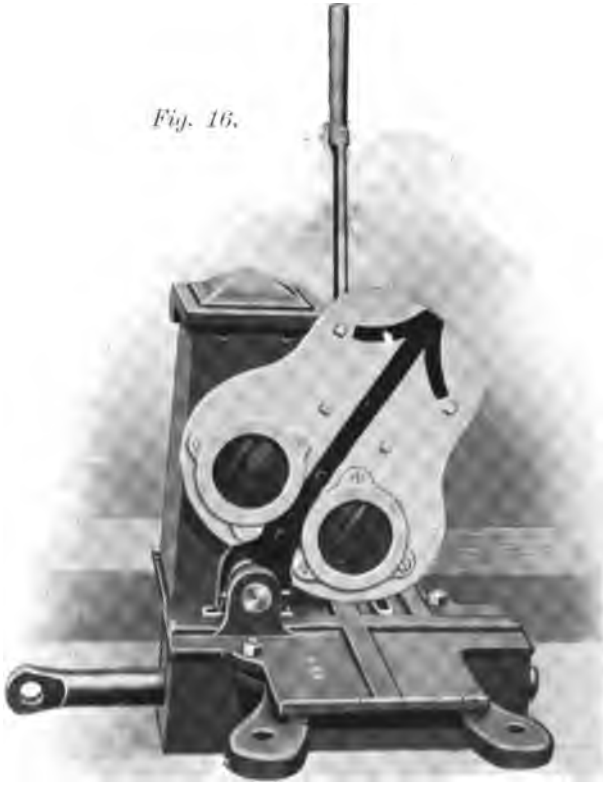

LEGGAT BROS.
ENGINEERING LITHOGRAPHERS, GLASGOW.

Fig. 4.

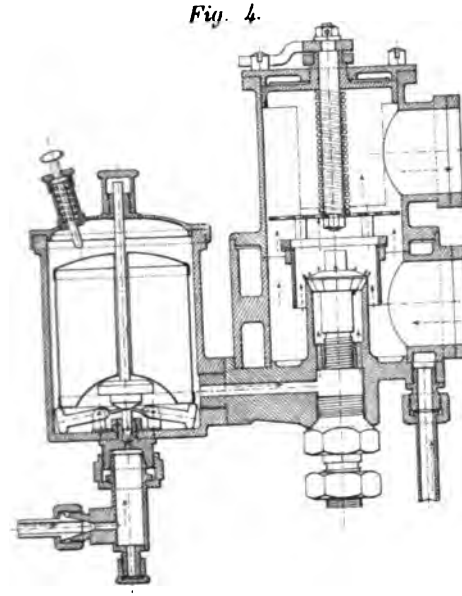

Fig. 9.

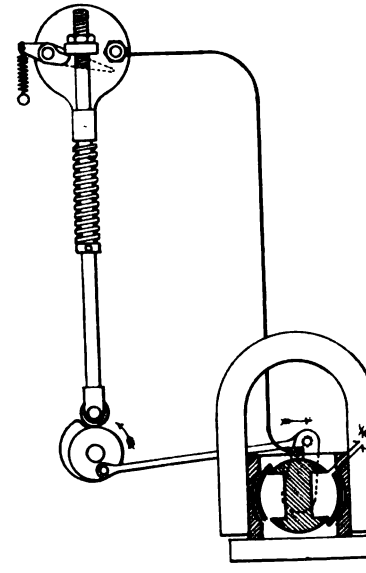

LEGGAT BROS.
ENGINEERING LITHOGRAPHERS, GLASG

Fig. 4.

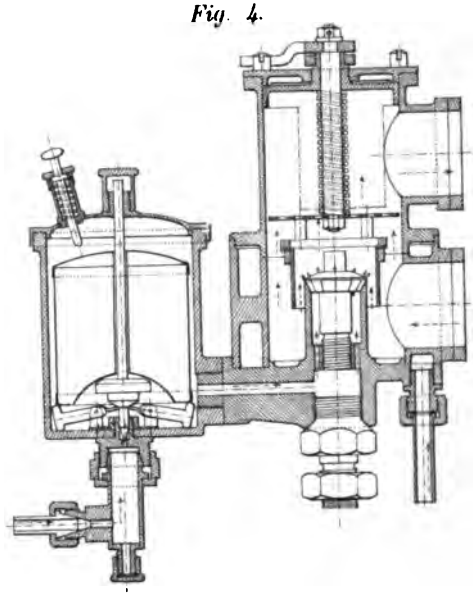

Fig. 9.

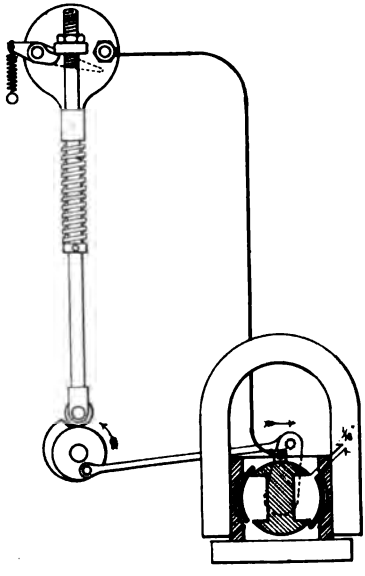

LEGGAT BROS.
ENGINEERING LITHOGRAPHERS, GLASGOW.

Fig. 14.

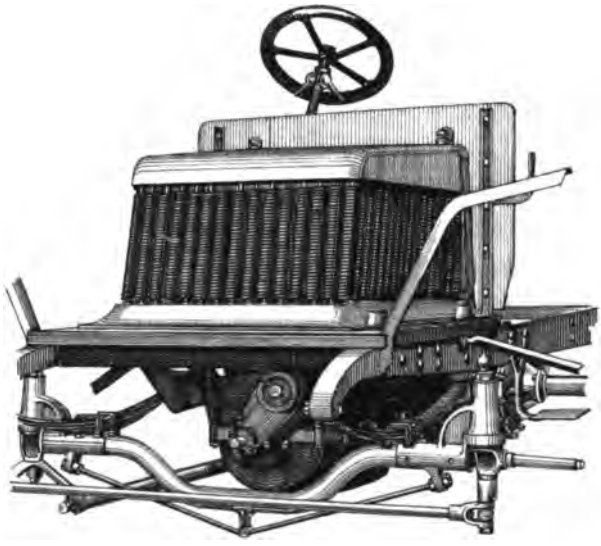

Fig. 17.

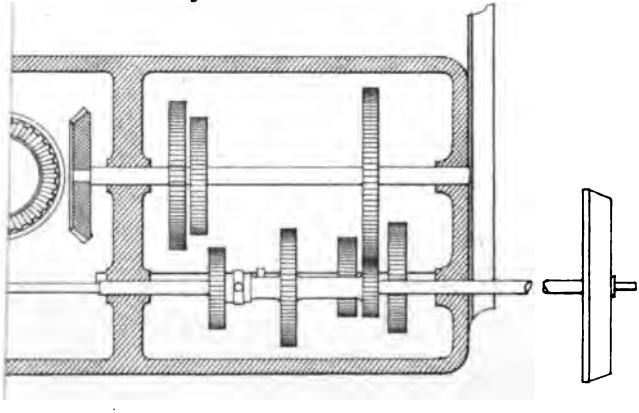

LEGGAT BROS
ENGINEERING LITHOGRAPHERS, GLASGOW.